China Daheng Group, Inc. Beijing Image Vision Technology Branch

MARS 10GigE Cameras

User Manual

Version: V1.0.23

Date: 2026-04-09

DAHENG IMAGING | 大恒图像

All rights reserved. No parts of this manual may be used or reproduced, in any forms or by any means, without prior written permission of China Daheng Group, Inc. Beijing Image Vision Technology Branch.

The right is also reserved to modify or change any parts of this manual in the future without prior notification.

All other trademarks are the properties of their respective owners.

© 2026 China Daheng Group, Inc. Beijing Image Vision Technology Branch

Web: www.daheng-imaging.com/en

Sales Email: isales@daheng-imaging.com

Sales Tel: +86 10 8282 8878-8081

Support Email: isupport@daheng-imaging.com

Preface

We really appreciate your choosing of DAHENG IMAGING products.

The MARS 10GigE series camera is DAHENG IMAGING's area scan industrial camera, featuring high resolution, high definition, high transmission bandwidth and extremely low noise. The camera is equipped with 10GigE interface, which is backward compatible with GigE network cards.

The MARS family cameras are especially suitable for machine vision applications such as industrial inspection, medical, scientific research, education and so on.

This manual describes in detail on how to install and use the MARS 10GigE industrial cameras.

Contents

1. Introduction 1
1.1. Series Introduction 1
1.2. Naming Rules 1
1.3. About 10GigE 2
1.4. Standards 2
1.5. Document, CAD/Technical Drawing and Software Downloads 2
2. Precautions 3
2.1. Safety Claim 3
2.2. Safety Instruction 3
2.3. Guidelines for Avoiding EMI and ESD 4
2.4. Environmental Requirements 4
2.5. Camera Mechanical Installation Precautions 5
2.6. Certification and Declaration 5
3. Installation Guidelines 7
3.1. Host Preparation 7
3.1.1. Software Package 7
3.1.2. User Software Interface 7
3.2. Camera Power 9
3.3. Camera Driver Installation 9
3.3.1. System Requirements 9
3.3.2. Driver Installation 9
3.4. Camera IP Configuration 9
3.5. Open Device and Start Acquisition 10
3.6. Image Transmission Optimization Configuration 11
4. General Specifications 12
4.1. Explanation of Important Parameters 12
4.2. MARS-GT Series 12
4.2.1. MARS-170-662GTM/C 12
4.2.2. MARS-280-409GTM/C 14
4.2.3. MARS-561-207GTM/C(-NF) 15
4.2.4. MARS-900-120GTM/C(-NF) 18
4.2.5. MARS-1261-90GTM/C(-NF) 19
4.2.6. MARS-1610-52GTM/C(-NF) 21
4.2.7. MARS-1840-63GTM/C(-NF) 22
4.2.8. MARS-2020-42GTM/C(-NF) 24

4.2.9. MARS-2440-35GTM/C(-NF) 25
4.2.10. MARS-2440-35GTM-NF-V 27
4.2.11. MARS-2621-42GTM/C(-NF) \ MARS-2622-42GTM/C(-NF) 28
4.2.12. MARS-2621-42GTM(-NF)-NIR \ MARS-2622-42GTM(-NF)-NIR 30
4.2.13. MARS-2621-42GTM/C-S \ MARS-2622-42GTM/C-S 31
4.2.14. MARS-2621-42GTM-NIR-S \ MARS-2622-42GTM-NIR-S 33
4.2.15. MARS-5000-24GTM/C(-NF/TF) 34
4.2.16. MARS-6100-18GTM/C-TF 38
4.2.17. MARS-6500/6501-18GTM/C(-NF/TF) 40
4.2.18. MARS-15100-6GTM/C-TF 42
4.3. MARS-GT-SWIR Series 44
4.3.1. MARS-321-176GTM-TN-SWIR 44
4.3.2. MARS-533-134GTM-TN-SWIR \ MARS-533-170GTM-TN-SWIR 45
5. Dimensions 47
5.1. Camera Dimensions 47
5.2. Optical Interface 56
5.3. Tripod Adapter Dimensions 57
6. Filters and Lenses 60
6.1. Filters 60
7. Electrical Interface 61
7.1. LED Light 61
7.2. Ethernet Port 61
7.3. I/O Port 61
7.3.1. I/O Port Definition 61
7.3.2. I/O Electrical Characteristics 62
7.3.2.1. Line0 (Opto-isolated Input) Circuit 62
7.3.2.2. Line1 (Opto-isolated Output) Circuit 64
7.3.2.3. GPIO 2 (Bidirectional) Circuit 66
8. Features 70
8.1. I/O Control 70
8.1.1. Input Mode Operation 70
8.1.2. Output Mode Operation 72
8.1.3. Read the LineStatus 75
8.2. Image Acquisition Control 76
8.2.1. Acquisition Start and Stop 76
8.2.1.1. Acquisition Start 76
8.2.1.2. Acquisition Stop 77
8.2.2. Acquisition Mode 77
8.2.3. Trigger Type Selection 78

8.2.4. Switching Trigger Mode 80
8.2.5. Continuous Mode and Configuration 81
8.2.6. Software Trigger Acquisition and Configuration 81
8.2.7. Hardware Trigger Acquisition and Configuration 82
8.2.8. MultiSource Trigger and Configuration 82
8.2.9. TriggerCache 83
8.2.10. Overlap Exposure and Non-overlap Exposure 84
8.2.11. Set Exposure 86
8.2.11.1. Set Exposure Mode 86
8.2.11.2. Set Sensor Exposure Mode 87
8.2.11.3. Set Exposure Time 89
8.2.11.4. Set Value of Exposure Time 89
8.2.12. Exposure Delay 90
8.3. Table Basic Features 93
8.3.1. Gain 93
8.3.2. Sensor Bit Depth 94
8.3.3. PGA Gain 94
8.3.4. Pixel Format 95
8.3.5. ROI 99
8.3.6. Auto Exposure/Auto Gain 99
8.3.6.1. ROI Setting of Auto Exposure/ Auto Gain 99
8.3.6.2. Auto Gain 100
8.3.6.3. Auto Exposure 101
8.3.7. Test Pattern 101
8.3.8. User Set Control 103
8.3.9. Device User ID 105
8.3.10. Timestamp 105
8.3.11. Binning 106
8.3.12. Decimation 108
8.3.13. Reverse X and Reverse Y 110
8.3.14. Digital Shift 111
8.3.15. Acquisition Status 113
8.3.16. Black Level 113
8.3.17. Remove Parameter Limits 113
8.3.18. User Data Area 116
8.3.19. Timer 117
8.3.20. Counter 118
8.4. Image Processing 119
8.4.1. Hot Pixel Correction 119
8.4.2. Static Defect Pixel Correction 119
8.4.3. Light Source Preset 120

8.4.4. Auto White Balance 121
8.4.4.1. Auto White Balance ROI 121
8.4.4.2. Auto White Balance Adjustment 122
8.4.5. Color Transformation Control 122
8.4.6. Saturation 124
8.4.7. Gamma 125
8.4.8. Sharpness 126
8.4.9. Flat Field Correction 126
8.4.9.1. Scenario Explanation 127
8.4.9.2. Flat Field Correction Plugin 128
8.4.9.3. FFC Function Attribute Table 129
8.4.9.4. API Interface 130
8.4.9.5. Important Notes 130
8.4.10. Lookup Table 131
8.4.11. Noise Reduction 132
8.5. Image Compression 133
8.5.1. Lossless Compression 133
8.5.1.1. Attribute Table 133
8.5.1.2. Usage Steps 134
8.5.1.3. Important Notes 135
8.6. Image Transmission 136
8.6.1. Maximum Allowable Frame Rate 136
8.6.2. Stream Channel Packet Size 147
8.6.3. Stream Channel Packet Delay 148
8.6.4. Bandwidth Reserve 149
8.7. Events 149
8.7.1. ExposureEnd Event 150
8.7.2. BlockDiscard Event 150
8.7.3. EventOverrun Event 151
8.7.4. FrameStartOvertrigger Event 151
8.7.5. BlockNotEmpty Event 151
8.7.6. FrameBurstStartOvertrigger Event 151
8.7.7. FrameStartWait Event 151
8.7.8. FrameBurstStartWait Event 151
8.8. Sequencer 152
8.8.1. Features 152
8.8.2. Example 153
8.8.3. Sequence support 153
8.9. Fan Control 154
8.10. PIV Mode 154
8.10.1. PIV Functional Description 154

8.10.2. PIV Setting Screen 155
8.10.3. PIV Operation Process 156
8.10.4. PIV Precautions on Use 156
8.10.4.1. Camera Temperature Control 156
8.10.4.2. Particle Lightness Control 156
9. Software Tools 157
9.1. GigE IP Configurator 157
9.2. Frame Rate Calculation Tool 161
10. FAQ 163
11. Revision History 166
12. Contact Us 169
12.1. Contact Sales 169
12.2. Contact Support 169

1. Introduction

1.1. Series Introduction

The MARS 10GigE series camera is DAHENG IMAGING's area scan industrial camera, featuring outstanding performance, powerful features, and outstanding price/performance ratio. The cameras are available in a variety of resolutions and frame rates, and are available with CMOS sensors from leading chip manufacturers.

The cameras transmits image data through the Ethernet interface, with a transmission link speed up to 10Gbit/s, which significantly increases the transmission bandwidth of traditional network cameras. Thanks to the locking screw connectors, the MARS series cameras can secure the reliability of cameras deployed in harsh industrial environments. Featuring high reliability and high price/performance ratio, the MARS series cameras are especially suitable for machine vision applications such as industrial inspection, medical, scientific research, education and so on.

1.2. Naming Rules

Details of the MARS 10GigE series camera is given in the general specifications below. Each camera model name is determined by its sensor's maximum resolution, maximum frame rate at maximum resolution, the color/monochrome type of the sensor, etc.

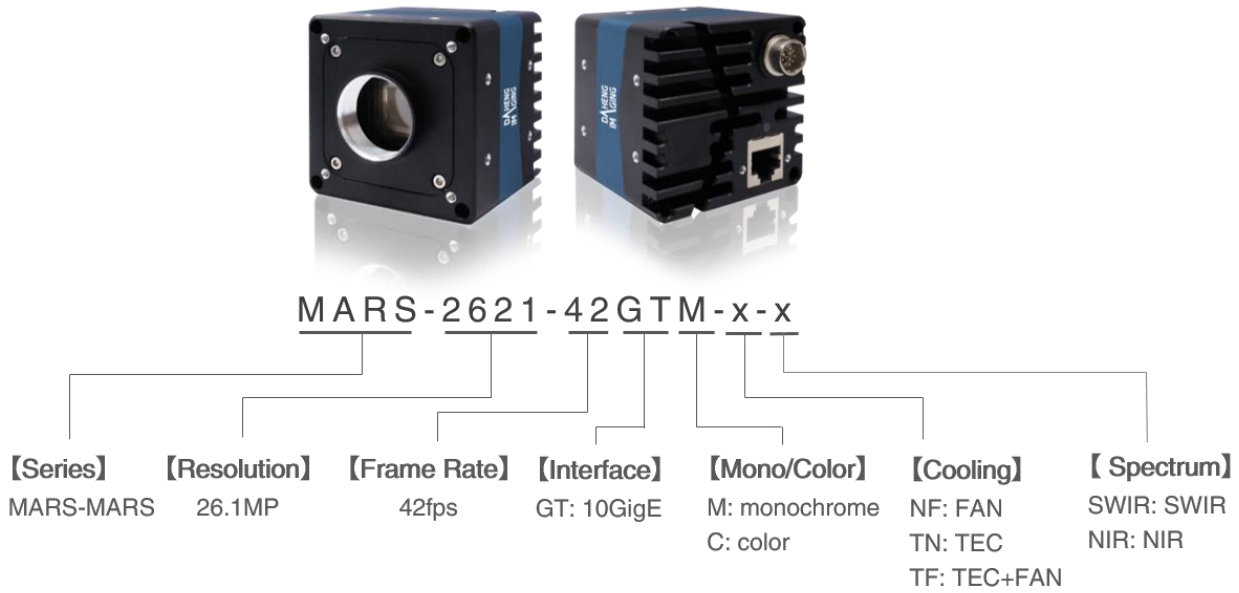

Figure 1-1 Naming rules

1.3. About 10GigE

10GigE is also called 10GBASE-T in some fields. 10GBASE-T is an Ethernet specification that uses copper twisted pair connection (super six or above). The effective bandwidth of the data layer is 10Gbit/s. The IEEE standard corresponding to 10GBASE-T is 802.3an-2006.

GigE Vision has been using Gigabit Ethernet as the transmission interface since its release in 2006. With the increase of sensor resolution and frame rate, the transmission link speed of Gigabit Ethernet has gradually limited the GigE Vision camera. The transmission of MARS 10GigE series camera is based on 10NBASE-T technology, the maximum transmission link speed can up to 10Gbit/s, and supports link speed switching to 1Gbit/s, which greatly improves the transmission link speed of network cameras and expands the application field of cameras.

Due to the greatly improved transmission link speed, the power consumption of the 10GigE camera is significantly increased compared with the GigE camera. The MARS 10GigE series camera uses a unique heat removal technology (passive heat removal technology), which maximizes the transmission capacity of the camera in a limited volume, and makes the camera highly reliable and environmentally adaptable.

Current PCs generally do not support 10GigE transmission interface, so users need to purchase a 10GigE network interface card (NIC) separately. It is recommended to use IOI manufacturer's NIC. The dual port NIC model is DGEAP2X-PCIE8XG302, and the single port NIC model is GE10-PCIE4XG301. The NIC driver should be version 3.1.7 or above, and the NIC driver can be downloaded from the IOI official website. NIC generally require PCIe ×4 slot Gen3, dual port network card requires PCIe ×8 slot.

1.4. Standards

The camera follows the GigE Vision 1.2 standard and the GEN<i>CAM3.0 standard.

1.5. Document, CAD/Technical Drawing and Software Downloads

Product related document, CAD/Technical drawing, tools and software can be downloaded from the Downloads of DAHENG IMAGING website.

2. Precautions

2.1. Safety Claim

Before installing and using DAHENG IMAGING products, please carefully read this manual and strictly comply with the usage requirements. And ensure to use the product in specified conditions, otherwise it may cause equipment malfunction. Our company will not bear any legal responsibility for any damage or injury caused by improper use of this product and disregard of safety instructions.

The symbols that may be found in this document are defined as follows:

Symbol	Description
	Info: Provides additional information to emphasize or supplement important points of the main text
	Notice: Indicates a potentially hazardous situation which, if not avoided, could result in equipment damage, data loss, performance degradation, or unexpected results
	Warning: Indicates a potential risk that, if not avoided, could result in injury accidents, equipment damage, or business interruption
	Danger: Indicates a hazard with a high level of risk, which if not avoided, will result in death or serious injury

2.2. Safety Instruction

Usage	
Warning	1) Do not install and operate the product in extreme environments with vibration, high temperature, humidity, dust, strong magnetic fields, explosive/corrosive smoke or gases, as it may damage the camera, cause a fire or electric shock. 2) Do not aim at the product with high intensity light sources directly, as it may damage the sensor. 3) If the device damaged, emits smoke, odor or noise, please turn off the power and unplug the power cord immediately, and contact our technical support engineer. 4) Unauthorized disassembly, repair, or modification of products is prohibited as it may damage the camera or cause a risk of electric shock. 5) In the use of the device, you must be in strict compliance with the electrical safety regulations of the nation and region. 6) Please use the power supply provided by reputable manufacturers that meets the camera power limit requirements, otherwise, it will damage the camera.
Notice	1) Check whether the device's package is in good condition, whether there is damage, deformation, etc. before unpacking. 2) After unpacking, please carefully inspect the quantity and appearance of the product and accessories for any abnormalities. 3) Please store and transport the product according to the specified storage and transportation conditions, ensure that the storage temperature and humidity meet the requirements.

© 2026 China Daheng Group, Inc. Beijing Image Vision Technology Branch

Personal Safety	
Warning	1) It is strictly prohibited to perform device wiring, dismantling, maintenance and other operations while powered on, otherwise there may be a risk of electric shock. 2) It is prohibited to touch the camera directly during using, otherwise there may be a risk of burns. 3) Please install and use the camera in accordance with regulations, otherwise there may be a risk of falling and get injured. 4) The edges of the lens mount and fan are relatively sharp, so pay attention to the risk of scratches during installation or use.

2.3. Guidelines for Avoiding EMI and ESD

You should consider the EMI (Electro Magnetic Interference) and ESD (Electro-Static discharge) problem in the process of using the camera, to guarantee the camera to work in a relatively good electromagnetic environment. The main measures are as follows:

1) CAT-6a cables or above with S/STP shielding are recommended.

2) Using shielded cable can avoid electro-magnetic interface. Shielding layer of the cable should conduct to ground nearby and not until stretched too long. When many devices need conduct to ground, using single point grounding to avoid earth loop.

3) Try to use camera cables that are the correct length. Avoid coiling camera cables. If the cables are too long, use a meandering path rather than coiling the cables.

4) Keep your cameras away from equipment with high voltage, or high current (as motor, inverter, relay, etc.). If necessary, use additional shielding.

5) ESD (electro-static discharge) may damage cameras permanently, so use suitable clothing (cotton) and shoes, and touch the metal to discharge the electro-static before operating cameras.

2.4. Environmental Requirements

1) Housing temperature during operation: 0°C ~ 45°C, humidity during operation: 10% ~ 80%.

   Storage temperature: -20°C ~ 70°C.

2) To avoid collecting dust in the optical filter, always keep the plastic cap on cameras when no lens is mounted.

3) PC requirement: Intel Core i7 9th generation, main frequency of 2.9GHz or above, 16GB memory or above, Win10 64bit OS or above.

4) NIC requirement: 10GigE NIC confirming to IEEE802.3an standard or higher performance NIC with 10Gbps link speed, CAT-6a cables or above, length less than 50m, recommended length less than 30m.

5) Make sure that cameras are transported in the original factory packages.

© 2026 China Daheng Group, Inc. Beijing Image Vision Technology Branch

2.5. Camera Mechanical Installation Precautions

Camera installation requirements:

Models	Screw and Camera Rotation Length	Screw Assembly Torque
MARS-321-176GTM-TN-SWIR MARS-533-134GTM-TN-SWIR MARS-533-170GTM-TN-SWIR	The front mounting hole of the front shell: 5mm ~ 5.8mm	≤1.5 N·m
	The side mounting hole of the camera: 3mm ~ 3.8 mm	
MARS-561-207GTM/C(-NF) MARS-900-120GTM/C(-NF) MARS-1261-90GTM/C(-NF) MARS-1610-52GTM/C(-NF) MARS-1840-630GTM/C(-NF) MARS-2020-42GTM/C(-NF) MARS-2440-35GTM/C(-NF) MARS-2440-35GTM-NF-V MARS-2621/2622-42GTM/C(-NF) MARS-2621/2622-42GTM(-NF)-NIR	3.2mm ~ 3.8mm	≤1.5 N·m
MARS-2621/2622-42GTM/C-S MARS-2621/2622-42GTM-NIR-S	4mm ~ 5mm	≤1.5 N·m
MARS-170-662GTM/C MARS-280-409GTM/C MARS-5000-24GTM/C(-NF) MARS-6500/6501-18GTM/C(-NF)	3.2mm ~3.8mm	≤5 N·m
MARS-5000-24GTM/C-TF MARS-6500/6501-18GTM/C-TF	4.5mm~5mm	The front mounting hole of the front shell adopts M4 screws: ≤5 N·m
		The side mounting hole of the front shell adopts M5 screws: ≤6 N·m
MARS-6100-18GTM/C-TF	4.5mm~5mm	The front mounting hole of the front shell adopts M4 screws: ≤5 N·m
		The side mounting hole adopts M5 screws: ≤6 N·m
MARS-15100-6GTM/C-TF	4.5mm~5mm	≤6 N·m

⚠ If the screw assembly torque is too high, it may cause the camera thread to slip.

2.6. Certification and Declaration

1. CE, RoHS

We declare that DAHENG IMAGING MARS 10GigE cameras have passed the following EU certifications:

- 2014/30/EU—Electromagnetic Compatibility Restriction
- 2011/65/EU—Restriction of Hazardous Substances (RoHS) and its revised directive 2015/863/EU

2. FCC

This device complies with Part 15 of the FCC Rules. Operation is subject to the following two conditions:

1) This device may not cause harmful interference

2) This device must accept any interference received, including interference that may cause undesired operation

NOTE: This equipment has been tested and found to comply with the limits for a Class A digital device, pursuant to Part 15 of the FCC Rules. These limits are designed to provide reasonable protection against harmful interference when the equipment is operated in a commercial environment. This equipment generates, uses, and can radiate radio frequency energy and, if not installed and used in accordance with the instruction manual, may cause harmful interference to radio communications. Operation of this equipment in a residential area is likely to cause harmful interference in which case the user will be required to correct the interference at his own expense.

3. CAN ICES-3 (A)/NMB-3(A)

3. Installation Guidelines

3.1. Host Preparation

3.1.1. Software Package

The Software package of Galaxy SDK is used to control the MARS series camera to provide stable, real-time image transmission, and provides a free SDK and abundant development sample source code. The package is composed of the following modules:

1) Driver Package (Driver): This package provides the MARS series camera driver program, such as: the GigE Vision cameras' Filter Driver Program.

2) Interface Library (API): This package provides the camera control interface library and the image processing interface library, supports the user for secondary development.

3) Demonstration Program (GalaxyView.exe): This demonstration program is used to display the camera control, image acquisition and image processing functions, the user can control the camera directly by the demonstration program, and the user can develop their own control program based on the camera interface library.

4) IP configurator (GxGigeIPConfig.exe): The tool is used to configure the camera IP address and to set the IP mode when the camera is powered on.

5) Sample: These samples demonstrate cameras' functions, the user can easily use these samples to control cameras, or refer to the samples to develop their own control programs.

6) Programmer's Manual: This manual is the users programming guide that instructs the users how to configure the programming environment and how to control cameras and acquisition images through the camera interface library.

You can download the latest software package from the website: www.daheng-imaging.com/en/Downloads.

3.1.2. User Software Interface

After installing the Galaxy SDK, the user can use the demonstration program and the samples to control the camera, also the user can control the camera by the program which is written by the user themselves. The software package provides three kinds of program interface, the user can select the suitable one for use according to their own requirements:

1) API Interface

In order to simplify the users' programming complexity, the package provides the general C programming interface GxIAPI.dll and image processing algorithm interface DxImageProc.dll for the user to control the camera, and provides the samples and software development manual which are based on these interfaces. The API interface supports C/C++/C#/Python, etc.

2) GenTL Interface

This interface is developed according to the standard of general transport layer in Gen<i>Cam standard, DAHENG IMAGING follows the Gen<i>Cam standard and provides the GenTL interface for the user, the user can use the GenTL interface directly to develop their own control program. The definition and usage of GenTL interfaces can be downloaded from the website of EMVA.

In addition, users can use some third-party software that supports Gen< i >Cam standard to control the camera, such as HALCON.

3) GigE Vision interface

The MARS series GigE Vision camera is compatible with the GigE Vision protocol, which allows the user to control the camera directly through the GigE Vision protocol. In addition, the user can use some third-party software that supports the GigE Vision protocol to control the camera, such as HALCON.

- **Note**

GEN<i>CAM standard: GEN<i>CAM is administered by the European Machine Vision Association (EMVA). GenICam provides a generic programming interface for all kinds of cameras and devices. It provides a standard application programming interface (API), no matter what interface technology is being used. It mainly includes the following modules:

- GenAPI: an XML description file format defining how to capture the features of a device and how to access and control these features in a standard way
- GenTL: a generic Transport Layer Interface, between software drivers and libraries, that transports the image data from the camera to the application running on a PC
- SFNC: common naming convention for camera features, which promotes interoperability between products from different manufacturers

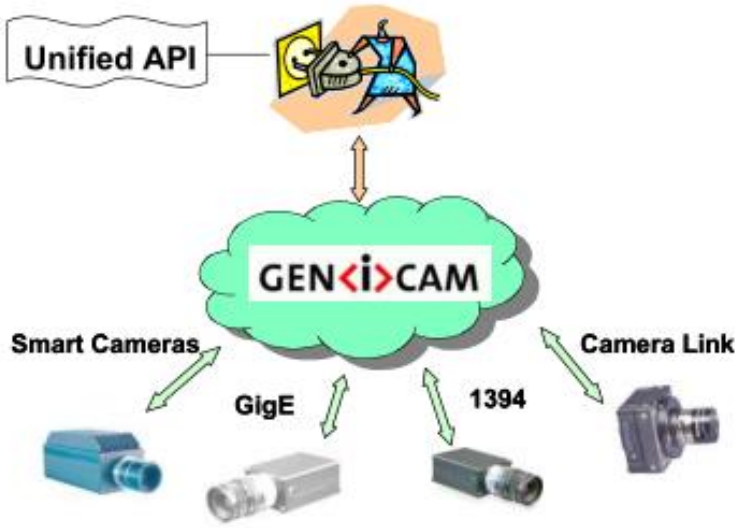

Figure 3-1 GEN<i>CAM standard schematic diagram

3.2. Camera Power

The MARS 10GigE series camera adopts external DC power supply mode. Connect the external DC power to the I/O interface through the I/O line to supply the camera. The power supply must use+12V (± 10%) ~ +24VDC (± 10%). +24VDC (± 10%) only for TF models.

1) Voltage outside of the specified range can cause damage.

2) The plug on the cable that you attach to the 12-pin Hirose I/O port must have 8 female pins. Using a plug designed for a smaller or a larger number of pins can damage the connector. See section 7.3 for the definition of I/O port.

3.3. Camera Driver Installation

3.3.1. System Requirements

MARS GalaxySDK is suitable for all cameras in the MARS series. The GalaxySDK contains various operating systems such as Windows and Linux. The requirements for the operating system and version of the installation package are as follows:

Operating Systems	Applicable Version
Windows	➢ Windows 10 (32bit, 64bit) ➢ Windows 11 (64bit)

Windows 10 64-bit system is recommended, please contact our technical support under other systems

3.3.2. Driver Installation

The steps to install the GalaxySDK under Windows are as follows:

1) Download the corresponding version of the installation package from www.daheng-imaging.com/en/Downloads. Please contact our technical support if not available.

2) Run the installer.

3) Follow the instructions of the installation wizard to complete the installation process. During the installation process, you can choose the camera interface you need (USB2.0, USB3 Vision, GigE Vision, etc.).

During the installation process, you must always pay attention to the anti-virus software to intercept the driver. If intercepted, it may cause the driver installation to fail.

3.4. Camera IP Configuration

The IP Configurator provided by GalaxySDK eliminates the need for users to configure IP for hosts and devices. Implement one-click configuration IP. You only need to follow the steps below to configure the camera IP. For details on how to use the tool, please refer to section 9.1.

1) Connect the 10GigE camera to the network port of the current host.

2) Open the 10GigE IP Configurator of the installation package.

3) Click "Auto Configure IP" on the right side of the GigE IP Configurator to automatically configure the IP.

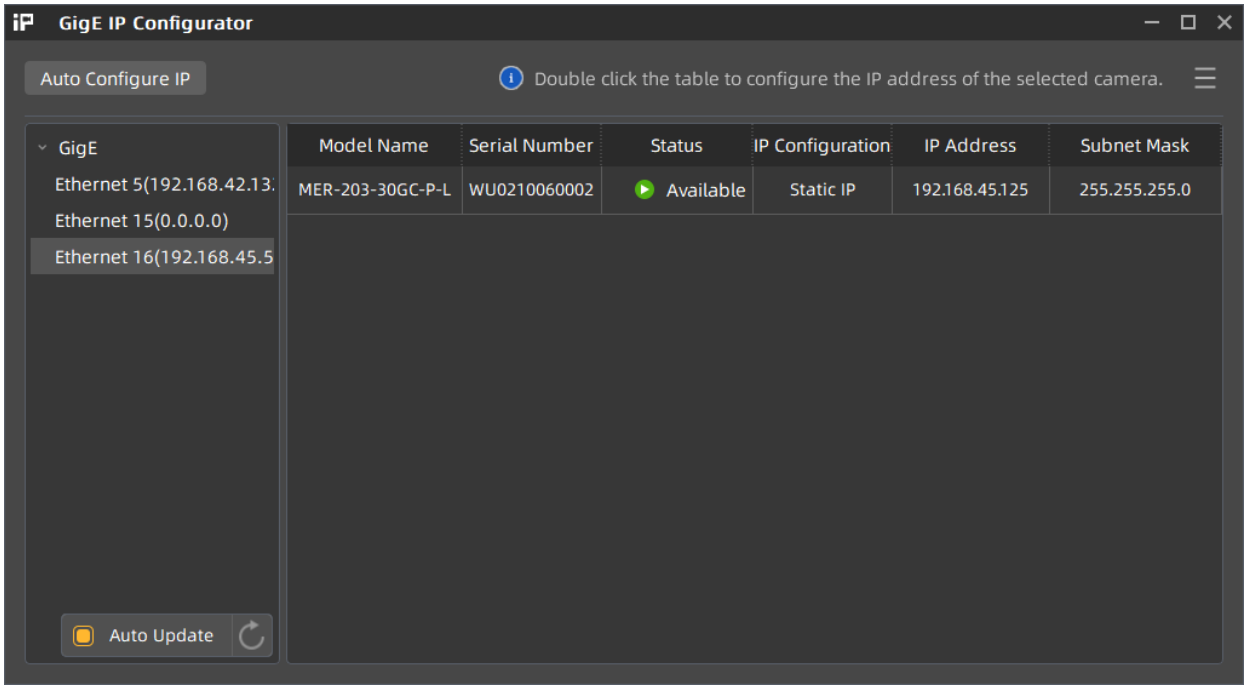

Figure 3-2 GigE IP Configurator

3.5. Open Device and Start Acquisition

After powering the device, connecting the device to the host, and configuring the IP, you can double-click the GalaxyView software to acquire image. The steps are as follows:

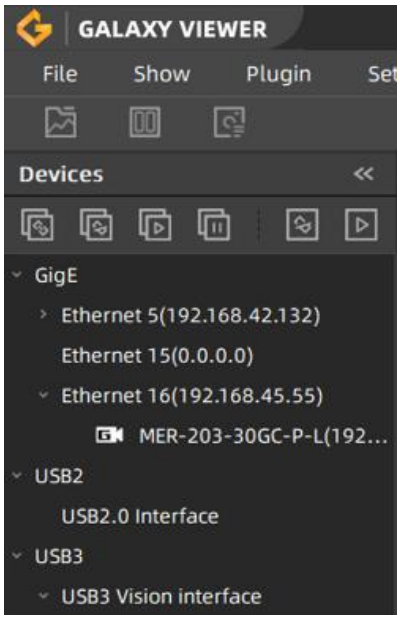

Figure 3-3 GalaxyView

1) Click the icon on the Device Tree in the GalaxyView to refresh device list.

2) After the device is enumerated, double-click the device enumerated in the device list.

3) Click the icon on the Device Tree to perform the Start Acquisition operation on the current device.

3.6. Image Transmission Optimization Configuration

- Transmission performance optimization settings on the camera end

1) Set packet size as 8164.

- Transmission performance optimization settings on the host side

1) Configure CPU C-State for BOIS, and set to Disabled.

2) Enable Jumbo Packet for network card, set to 9K or above.

3) Set network speed to adaptive.

4) Set Transmit Buffers to 4096 or above (if it cannot reach 4096, set it to the maximum).

5) Set Receive Buffers to 4096 or above (if it cannot reach 4096, set it to the maximum).

6) Set Flow Control as Rx & Tx Enabled (Pause Frame).

7) Configure Number of RX Descriptors at least 2000 for network card (Some network cards do not have this setting).

8) Put the network card to the nearest PCIe plug to the CPU.

9) Please ensure that your NIC driver is updated to the latest version, V3.1.7 or above.

10) Two or more memory modules should be installed on the host side. Insert two memory modules into two memory slots of the same color to form a dual channel memory configuration, or install the memory modules according to the motherboard memory insertion instructions to form a dual channel memory configuration.

© 2026 China Daheng Group, Inc. Beijing Image Vision Technology Branch

4. General Specifications

4.1. Explanation of Important Parameters

QE: Quantum efficiency, which is the ratio of the average number of photoelectrons produced per unit time at a wavelength to the number of incident photons.

Sensitivity: The change of the sensor output signal relative to the incident light energy. The commonly used sensitivity units are V/((W/m^2) •s), V/lux •s, e-/((W/m^2) •s) or DN/ ((W/m^2) •s).

Spectral response: The spectral response graph given by different manufacturers are different. Some graphs' ordinate is relative sensitivity response, and abscissa is wavelength. Some graphs' ordinate is QE, and abscissa is wavelength.

4.2. MARS-GT Series

4.2.1. MARS-170-662GTM/C

Specifications	MARS-170-662GTC	MARS-170-662GTM
Resolution	1600 × 1104	
Sensor Type	Sony IMX425 Global shutter CMOS	
Max. Image Circle	1.1 inch	
Pixel Size	9.0μm × 9.0μm	
Frame Rate	662fps	
ADC Bit Depth	12bit	
Pixel Bit Depth	8bit, 10bit, 12bit	
Mono/Color	Color	Mono
Pixel Formats	Bayer RG8 / Bayer RG10 / Bayer RG12 / Bayer RG12Packed / RGB8 / Mono8	Mono8 / Mono10 / Mono12 / Mono12Packed
Signal Noise Ratio	50dB	51dB
Exposure Time	Ultra short: 1μs ~ 5μs, Actual Steps: 0.1μs Standard: 9μs ~ 1s, Actual Steps: 1 row period	
Gain	Analog gain: 0dB ~ 48dB, Default: 0dB, Step: 0.1dB Digital gain: 0dB ~ 24dB, Default: 0dB, Step: 0.1dB	
Binning	FPGA: 1×1, 1×2, 2×1, 2×2	

© 2026 China Daheng Group, Inc. Beijing Image Vision Technology Branch

Decimation	Not Supported
Synchronization	Hardware trigger, software trigger
I/O	1 input and 1 output with opto-isolated, 1 bidirectional programmable GPIO
Operating Temp.	0°C~+50°C
Storage Temp.	-20°C~+70°C
Operating Humidity	10%~80%
Camera Power Requirements	12VDC-10% ~ 24VDC+10%
Power Consumption	< 12.8W @ 12VDC
Lens Mount	C
Data Interface	Gigabit Ethernet (1000Mbit/s) or 10G Ethernet (10000Mbit/s)
Dimensions	74mm × 74mm × 52.6mm (without C mount length)
Weight	470g
Operating System	Win10/Win11 32bit, 64bit OS, 64bit OS is recommended
Programmable Control	Image size, gain, exposure time, trigger polarity, flash polarity
Conformity	CE, RoHS, FCC, ICES, UKCA, GigE Vision, GenICam

Table 4-1 MARS-170-662GTM/C camera specifications

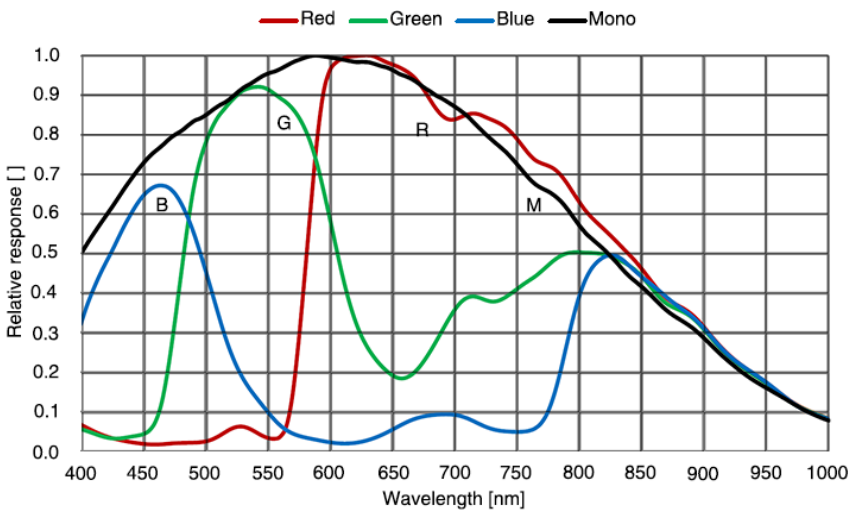

Figure 4-1 MARS-170-662GTM/C sensor spectral response

4.2.2. MARS-280-409GTM/C

Specifications	MARS-280-409GTC	MARS-280-409GTM
Resolution	1936 × 1464	
Sensor Type	Sony IMX421 Global shutter CMOS	
Max. Image Circle	2/3 inch	
Pixel Size	4.5μm × 4.5μm	
Frame Rate	409fps	
ADC Bit Depth	12bit	
Pixel Bit Depth	8bit, 10bit, 12bit	
Mono/Color	Color	Mono
Pixel Formats	Bayer RG8 / Bayer RG10 / Bayer RG12 / Bayer RG12Packed / RGB8 / Mono8	Mono8 / Mono10 / Mono12 / Mono12Packed
Signal Noise Ratio	45dB	
Exposure Time	Ultra short: 1μs ~ 5μs, Actual Steps: 0.1μs Standard: 9μs ~ 1s, Actual Steps: 1 row period	
Gain	Analog gain: 0dB ~ 48dB, Default: 0dB, Step: 0.1dB Digital gain: 0dB ~ 24dB, Default: 0dB, Step: 0.1dB	
Binning	FPGA: 1×1, 1×2, 2×1, 2×2	Sensor: 1×1, 2×2
Decimation	Not Supported	
Synchronization	Hardware trigger, software trigger	
I/O	1 input and 1 output with opto-isolated, 1 bidirectional programmable GPIO	
Operating Temp.	0°C~+50°C	
Storage Temp.	-20°C~+70°C	
Operating Humidity	10%~80%	
Camera Power Requirements	12VDC-10% ~ 24VDC+10%	
Power Consumption	< 12.8W @ 12VDC	
Lens Mount	C	

© 2026 China Daheng Group, Inc. Beijing Image Vision Technology Branch

Data Interface	Gigabit Ethernet (1000Mbit/s) or 10G Ethernet (10000Mbit/s)
Dimensions	74mm × 74mm × 52.6mm (without C mount length)
Weight	468g
Operating System	Win10/Win11 32bit, 64bit OS, 64bit OS is recommended
Programmable Control	Image size, gain, exposure time, trigger polarity, flash polarity
Conformity	CE, RoHS, FCC, ICES, UKCA, GigE Vision, GenICam

Table 4-2 MARS-280-409GTM/C camera specifications

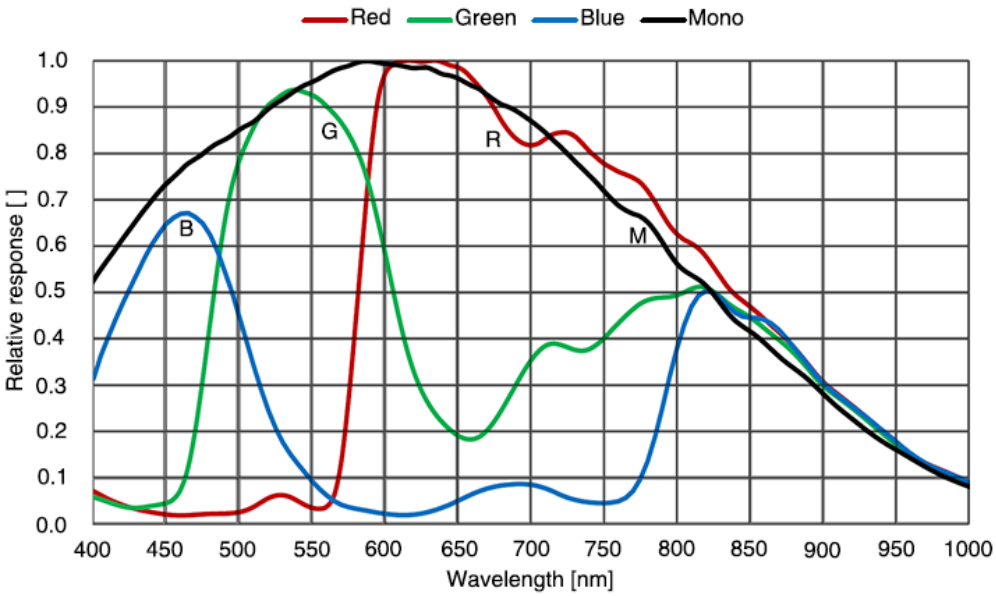

Figure 4-2 MARS-280-409GTM/C sensor spectral response

4.2.3. MARS-561-207GTM/C(-NF)

Specifications	MARS-561-207GTC MARS-561-207GTC-NF	MARS-561-207GTM MARS-561-207GTM-NF
Resolution	2592 × 2160	
Sensor Type	Gpixel GMAX2505, Global Shutter CMOS	
Max. Image Circle	1/2 inch	
Pixel Size	2.5μm × 2.5μm	
Frame Rate	207.77fps	
ADC Bit Depth	10bit	
Pixel Bit Depth	8bit, 10bit	
Mono/Color	Color	Mono

Pixel Formats	Bayer GB8/Bayer GB10	Mono8/Mono10
Signal Noise Ratio	36.77dB	36.77dB
Exposure Time	4μs~1s, Actual Steps: 1 row period	
Gain	0dB~16dB. Default: 0dB, Step: 0.1dB	
Binning	1×1, 2×1 (No vertical Binning)	
Decimation	Horizontal FPGA, Vertical Sensor: 1×1, 1×2, 2×1, 2×2	
Synchronization	Hardware trigger, software trigger	
I/O	1 input and 1 output with opto-isolated, 1 bidirectional programmable GPIO	
Operating Temp.	0°C~+50°C	
Storage Temp.	-20°C~+70°C	
Operating Humidity	10%~80%	
Camera Power Requirements	12VDC-10% ~ 24VDC+10%	
Power Consumption	< 12.7W @ 24VDC (without fan) < 13.63W @ 24VDC (with fan)	
Lens Mount	C	
Data Interface	Gigabit Ethernet (1000Mbit/s) or 10G Ethernet (10000Mbit/s)	
Dimensions	60mm × 60mm × 54mm (without C mount length)	
Weight	340g(without fan), 360(with fan)	
Operating System	Win10/Win11 32bit, 64bit OS, 64bit OS is recommended	
Programmable Control	Image size, gain, exposure time, trigger polarity, flash polarity	
Conformity	CE, RoHS, FCC, ICES, UKCA, GigE Vision, GenICam	

Table 4-3 MARS-561-207GTM/C(-NF) camera specifications

1) Monochrome camera

As shown below, allowed defect numbers in cluster are 2~4 (cluster with 4 consecutive defect pixels in a row is not allowed (NOK)).

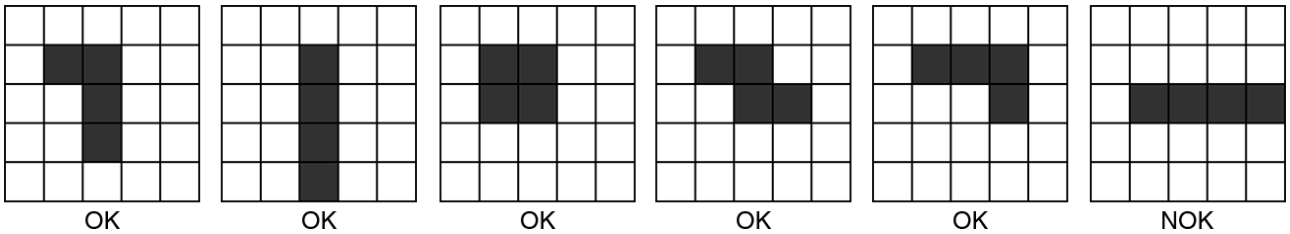

Figure 4-3 MARS-561-207GTM(-NF) clusters distribution diagram

2) Color camera

Examples 1: Maximum cluster size within same Bayer color plane is 4, but cluster with 4 consecutive defect pixels in a row is not allowed.

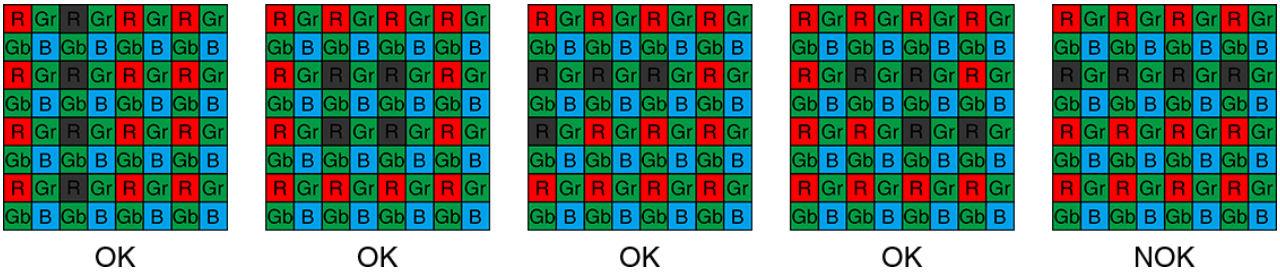

Figure 4-4 MARS-561-207GTC(-NF) clusters within same Bayer color plane distribution diagram

Examples 2: When different Bayer color plane combined, maximum cluster size is 8 in any given 5×5 pixel array.

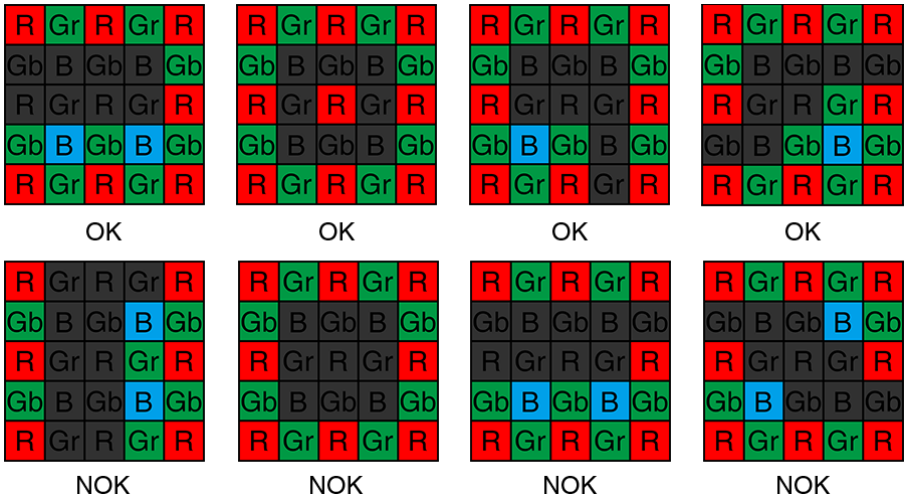

Figure 4-5 MARS-561-207GTC(-NF) clusters within different Bayer color plane distribution diagram

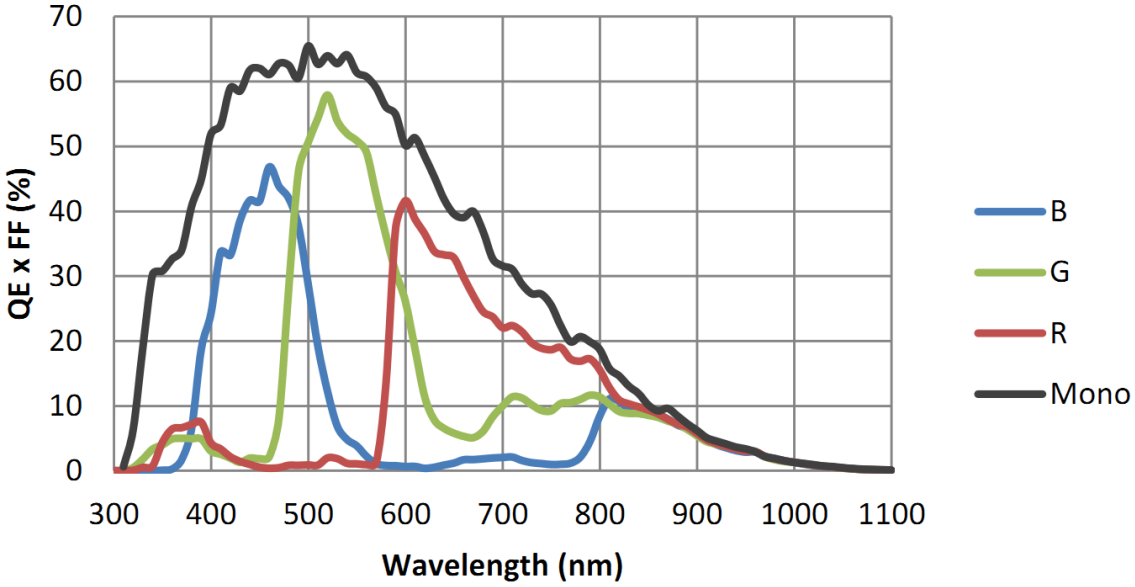

Figure 4-6 MARS-561-207GTM/C(-NF) sensor spectral response

4.2.4. MARS-900-120GTM/C(-NF)

Specifications	MARS-900-120GTC MARS-900-120GTC-NF	MARS-900-120GTM MARS-900-120GTM-NF
Resolution	4192 × 2160	
Sensor Type	Gpixel GMAX2509, Global Shutter CMOS	
Max. Image Circle	2/3 inch	
Pixel Size	2.5μm × 2.5μm	
Frame Rate	120.36fps	
ADC Bit Depth	12bit	
Pixel Bit Depth	8bit, 12bit	
Mono/Color	Color	Mono
Pixel Formats	Bayer GB8/Bayer GB12	Mono8/Mono12
Signal Noise Ratio	36.46dB	36.44dB
Exposure Time	4μs~1s, Actual Steps: 1 row period	
Gain	0dB~16dB. Default: 0dB, Step: 0.1dB	
Binning	1×1, 2×1 (No vertical Binning)	
Decimation	Horizontal FPGA, Vertical Sensor: 1×1, 1×2, 2×1, 2×2	
Synchronization	Hardware trigger, software trigger	
I/O	1 input and 1 output with opto-isolated, 1 bidirectional programmable GPIO	
Operating Temp.	0°C~+50°C	
Storage Temp.	-20°C~+70°C	
Operating Humidity	10%~80%	
Camera Power Requirements	12VDC-10% ~ 24VDC+10%	
Power Consumption	< 12.7W @ 24VDC (without fan) < 13.63W @ 24VDC (with fan)	
Lens Mount	C	

© 2026 China Daheng Group, Inc. Beijing Image Vision Technology Branch

Data Interface	Gigabit Ethernet (1000Mbit/s) or 10G Ethernet (10000Mbit/s)
Dimensions	60mm × 60mm × 54mm (without C mount length)
Weight	340g(without fan), 360(with fan)
Operating System	Win10/Win11 32bit, 64bit OS, 64bit OS is recommended
Programmable Control	Image size, gain, exposure time, trigger polarity, flash polarity
Conformity	CE, RoHS, FCC, ICES, UKCA, GigE Vision, GenICam

Table 4-4 MARS-900-120GTM/C(-NF) camera specifications

The camera's cluster distribution diagram refer to 4.2.3 section.

The sensor spectral response refer to 4.2.3 section.

4.2.5. MARS-1261-90GTM/C(-NF)

Specifications	MARS-1261-90GTC MARS-1261-90GTC-NF	MARS-1261-90GTM MARS-1261-90GTM-NF
Resolution	4096 × 3072	
Sensor Type	ON XGS12000, Global Shutter CMOS	
Max. Image Circle	1 inch	
Pixel Size	3.2μm × 3.2μm	
Frame Rate	89.9fps	
ADC Bit Depth	12bit	
Pixel Bit Depth	8bit, 12bit	
Mono/Color	Color	Mono
Pixel Formats	Bayer RG8/Bayer RG12	Mono8/Mono12
Signal Noise Ratio	39.95dB	39.93dB
Exposure Time	Ultra short: 15μs~36μs, Actual Steps: 1μs Standard: 37μs~1s, Actual Steps: 1 row period	
Gain	0dB~24dB. Default: 0dB, Step: 0.1dB	
Binning	1×1, 2×1 (No vertical Binning)	
Decimation	Horizontal, Vertical Sensor: 1×1, 1×2, 2×1, 2×2	

© 2026 China Daheng Group, Inc. Beijing Image Vision Technology Branch

Synchronization	Hardware trigger, software trigger
I/O	1 input and 1 output with opto-isolated, 1 bidirectional programmable GPIO
Operating Temp.	0°C~+50°C
Storage Temp.	-20°C~+70°C
Operating Humidity	10%~80%
Camera Power Requirements	12VDC-10% ~ 24VDC+10%
Power Consumption	< 12.8W @ 12VDC (without fan) < 13.73W @ 24VDC (with fan)
Lens Mount	C
Data Interface	Gigabit Ethernet (1000Mbit/s) or 10G Ethernet (10000Mbit/s)
Dimensions	60mm × 60mm × 54mm (without C mount length)
Weight	341g(without fan), 361(with fan)
Operating System	Win10 32bit, 64bit OS, 64bit OS is recommended
Programmable Control	Image size, gain, exposure time, trigger polarity, flash polarity
Conformity	CE, RoHS, FCC, ICES, UKCA, GigE Vision, GenICam

Table 4-5 MARS-1261-90GTM/C(-NF) camera specifications

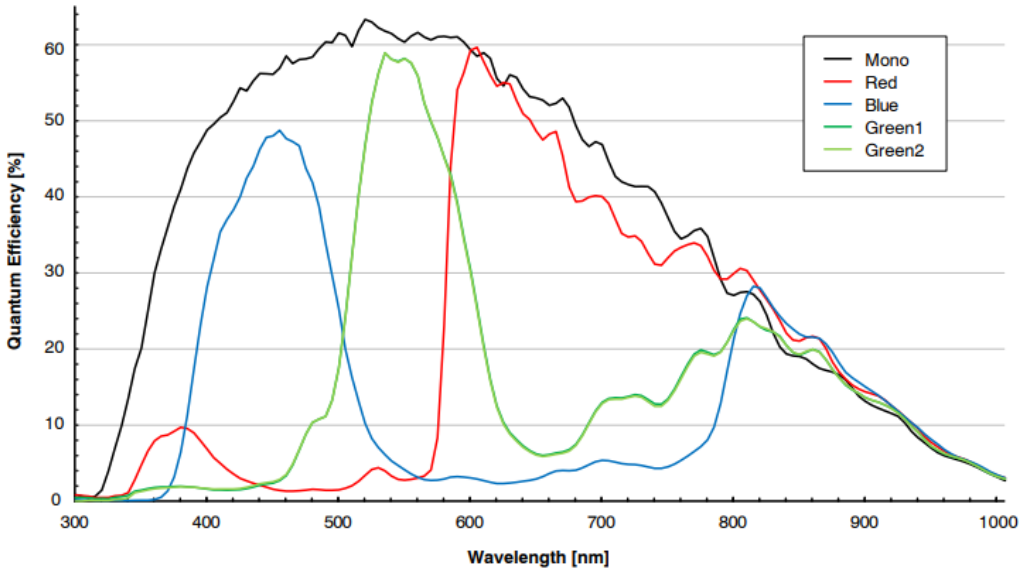

Figure 4-7 MARS-1261-90GTM/C(-NF) sensor spectral response

4.2.6. MARS-1610-52GTM/C(-NF)

Specifications	MARS-1610-52GTC MARS-1610-52GTC-NF	MARS-1610-52GTM MARS-1610-52GTM-NF
Resolution	5328 × 3040	
Sensor Type	Sony IMX542 Global shutter CMOS	
Max. Image Circle	1.1 inch	
Pixel Size	2.74μm × 2.74μm	
Frame Rate	52fps @ 5328 × 3040	
ADC Bit Depth	12bit	
Pixel Bit Depth	8bit, 10bit, 12bit	
Mono/Color	Color	Mono
Pixel Formats	Bayer RG8//Bayer RG10/Bayer RG12	Mono8//Mono10/Mono12
Signal Noise Ratio	40.45dB	40.08dB
Exposure Time	UltraShort: 1μs~2.4μs, Actual Steps: 0.1μs Standard: 3μs~20μs, Decimation 1×1 Actual Steps: 1μs, Decimation 2×2 Actual Steps: 1 row period; Standard: 21μs~1s, Actual Steps: 1 row period	
Gain	0dB~24dB. Default: 0dB, Step: 0.1dB	
Binning	Not Supported	Sensor: 1×1, 2×2
Decimation	Sensor: 1×1, 2×2	
Synchronization	Hardware trigger, software trigger	
I/O	1 input and 1 output with opto-isolated, 1 bidirectional programmable GPIO	
Operating Temp.	0°C~+50°C	
Storage Temp.	-20°C~+70°C	
Operating Humidity	10%~80%	
Camera Power Requirements	12VDC-10% ~ 24VDC+10%	
Typical Power	10.2W @ 24VDC (without fan) 11.0W @ 24VDC (with fan)	
Lens Mount	C	

© 2026 China Daheng Group, Inc. Beijing Image Vision Technology Branch

Data Interface	Gigabit Ethernet (1000Mbit/s) or 10G Ethernet (10000Mbit/s)
Dimensions	60mm × 60mm × 54mm (without C mount length)
Weight	315g (without fan), 335g (with fan)
Operating System	Win10/Win11 32bit, 64bit OS, 64bit OS is recommended
Programmable Control	Image size, gain, exposure time, trigger polarity, flash polarity
Conformity	CE, RoHS, FCC, ICES, UKCA, GigE Vision, GenICam

Table 4-6 MARS-1610-52GTM/C(-NF) camera specifications

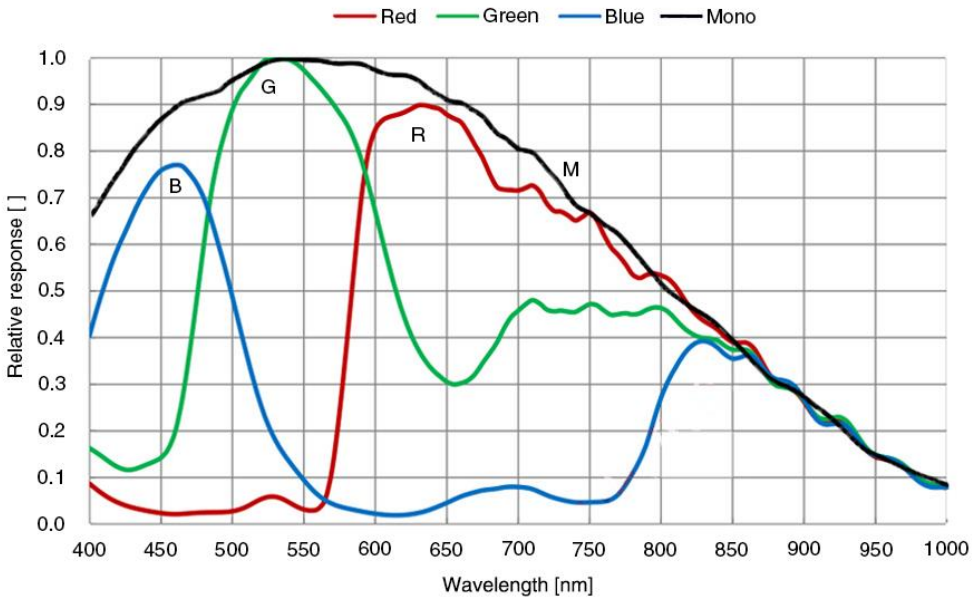

Figure 4-8 MARS-1610-52GTM/C(-NF) sensor spectral response

4.2.7. MARS-1840-63GTM/C(-NF)

Specifications	MARS-1840-63GTC MARS-1840-63GTC-NF	MARS-1840-63GTM MARS-1840-63GTM-NF
Resolution	4496 × 4096	
Sensor Type	Gpixel GMAX2518, Global Shutter CMOS	
Max. Image Circle	1 inch	
Pixel Size	2.5μm × 2.5μm	
Frame Rate	63.78fps	
ADC Bit Depth	12bit	

Pixel Bit Depth	8bit, 12bit	
Mono/Color	Color	Mono
Pixel Formats	Bayer GB8/Bayer GB12	Mono8/Mono12
Signal Noise Ratio	37.59dB	37.2dB
Exposure Time	10μs~1s, Actual Steps: 1 row period	
Gain	0dB~16dB. Default: 0dB, Step: 0.1dB	
Binning	1×1, 2×1 (No vertical Binning)	
Decimation	Horizontal FPGA, Vertical Sensor: 1×1, 1×2, 2×1, 2×2	
Synchronization	Hardware trigger, software trigger	
I/O	1 input and 1 output with opto-isolated, 1 bidirectional programmable GPIO	
Operating Temp.	0°C~+50°C	
Storage Temp.	-20°C~+70°C	
Operating Humidity	10%~80%	
Camera Power Requirements	12VDC-10% ~ 24VDC+10%	
Power Consumption	< 12.7W @ 24VDC (without fan) < 13.63W @ 24VDC (with fan)	
Lens Mount	C	
Data Interface	Gigabit Ethernet (1000Mbit/s) or 10G Ethernet (10000Mbit/s)	
Dimensions	60mm × 60mm × 54mm (without C mount length)	
Weight	340g(without fan), 360(with fan)	
Operating System	Win10/Win11 32bit, 64bit OS, 64bit OS is recommended	
Programmable Control	Image size, gain, exposure time, trigger polarity, flash polarity	
Conformity	CE, RoHS, FCC, ICES, UKCA, GigE Vision, GenICam	

Table 4-7 MARS-1840-63GTM/C(-NF) camera specifications

The camera's cluster distribution diagram refer to 4.2.3 section.

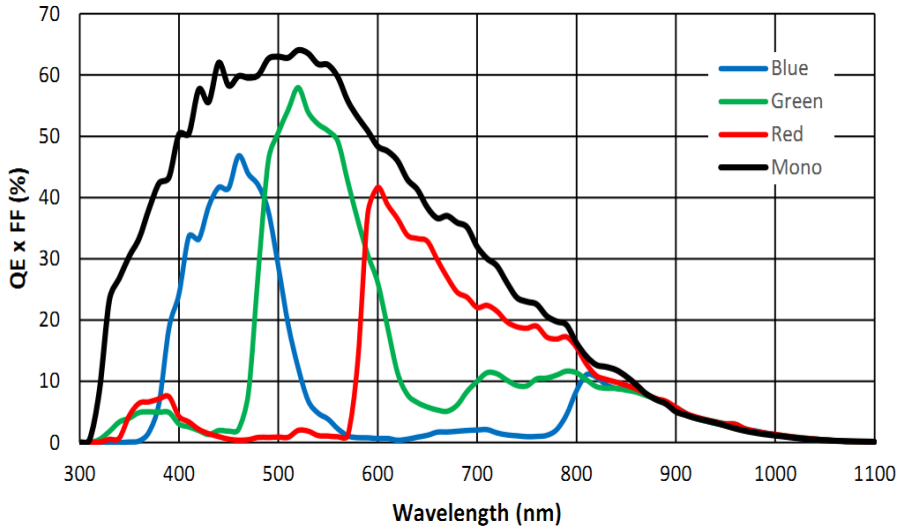

Figure 4-9 MARS-1840-63GTM/C(-NF) sensor spectral response

4.2.8. MARS-2020-42GTM/C(-NF)

Specifications	MARS-2020-42GTC MARS-2020-42GTC-NF	MARS-2020-42GTM MARS-2020-42GTM-NF
Resolution	4512 × 4512	
Sensor Type	Sony IMX541 Global shutter CMOS	
Max. Image Circle	1.1 inch	
Pixel Size	2.74μm × 2.74μm	
Frame Rate	38.3fps @ 4512 × 4512	
ADC Bit Depth	12bit	
Pixel Bit Depth	8bit, 10bit, 12bit	
Mono/Color	Color	Mono
Pixel Formats	Bayer RG8//Bayer RG10/Bayer RG12	Mono8//Mono10/Mono12
Signal Noise Ratio	40.38dB	40.11dB
Exposure Time	UltraShort: 1μs~2.4μs, Actual Steps: 0.1μs Standard: 3μs~20μs, Decimation 1×1 Actual Steps: 1μs, Decimation 2×2 Actual Steps: 1 row period; Standard: 21μs~1s, Actual Steps: 1 row period	
Gain	0dB~24dB. Default: 0dB, Step: 0.1dB	
Binning	FPGA: 1×1, 2×2	Sensor: 1×1, 2×2
Decimation	Sensor: 1×1, 2×2	

Synchronization	Hardware trigger, software trigger
I/O	1 input and 1 output with opto-isolated, 1 bidirectional programmable GPIO
Operating Temp.	0°C~+50°C
Storage Temp.	-20°C~+70°C
Operating Humidity	10%~80%
Camera Power Requirements	12VDC-10% ~ 24VDC+10%
Typical Power	10.2W @ 24VDC (without fan) 11.0W @ 24VDC (with fan)
Lens Mount	C
Data Interface	Gigabit Ethernet (1000Mbit/s) or 10G Ethernet (10000Mbit/s)
Dimensions	60mm × 60mm × 54mm (without C mount length)
Weight	320g (without fan), 340g (with fan)
Operating System	Win10/Win11 32bit, 64bit OS, 64bit OS is recommended
Programmable Control	Image size, gain, exposure time, trigger polarity, flash polarity
Conformity	CE, RoHS, FCC, ICES, UKCA, GigE Vision, GenICam

Table 4-8 MARS-2020-42GTM/C(-NF) camera specifications

The sensor spectral response refer to 4.2.6 section.

4.2.9. MARS-2440-35GTM/C(-NF)

Specifications	MARS-2440-35GTC MARS-2440-35GTC-NF	MARS-2440-35GTM MARS-2440-35GTM-NF
Resolution	5328 × 4608	
Sensor Type	Sony IMX540 Global shutter CMOS	
Max. Image Circle	1.2 inch	
Pixel Size	2.74μm × 2.74μm	
Frame Rate	35fps @ 5328 × 4608	
ADC Bit Depth	12bit	

Pixel Bit Depth	8bit, 10bit, 12bit	
Mono/Color	Color	Mono
Pixel Formats	Bayer RG8//Bayer RG10/Bayer RG12	Mono8//Mono10/Mono12
Signal Noise Ratio	40.09dB	40.24dB
Exposure Time	UltraShort: 1μs~2.4μs, Actual Steps: 0.1μs Standard: 3μs~20μs, Decimation 1×1 Actual Steps: 1μs, Decimation 2×2 Actual Steps: 1 row period; Standard: 21μs~1s, Actual Steps: 1 row period	
Gain	0dB~24dB. Default: 0dB, Step: 0.1dB	
Binning	Not Supported	Sensor: 1×1, 2×2
Decimation	Sensor: 1×1, 2×2	
Synchronization	Hardware trigger, software trigger	
I/O	1 input and 1 output with opto-isolated, 1 bidirectional programmable GPIO	
Operating Temp.	0°C~+50°C	
Storage Temp.	-20°C~+70°C	
Operating Humidity	10%~80%	
Camera Power Requirements	12VDC-10% ~ 24VDC+10%	
Typical Power	9.9W @ 24VDC (without fan) 10.7W @ 24VDC (with fan)	
Lens Mount	C	
Data Interface	Gigabit Ethernet (1000Mbit/s) or 10G Ethernet (10000Mbit/s)	
Dimensions	60mm × 60mm × 54mm (without C mount length)	
Weight	320g (without fan), 340g (with fan)	
Operating System	Win10/Win11 32bit, 64bit OS, 64bit OS is recommended	
Programmable Control	Image size, gain, exposure time, trigger polarity, flash polarity	
Conformity	CE, RoHS, FCC, ICES, UKCA, GigE Vision, GenICam	

Table 4-9 MARS-2440-35GTM/C(-NF) camera specifications

The sensor spectral response refer to 4.2.6 section.

4.2.10. MARS-2440-35GTM-NF-V

Specifications	MARS-2440-35GTM-NF-V
Resolution	5328 × 4608
Sensor Type	Sony IMX540 Global shutter CMOS
Max. Image Circle	1.2 inch
Pixel Size	2.74μm × 2.74μm
Frame Rate	35fps @ 5328 × 4608
ADC Bit Depth	12bit
Pixel Bit Depth	8bit, 10bit, 12bit
Mono/Color	Mono
Pixel Formats	Mono8//Mono10/Mono12
Signal Noise Ratio	40.24dB
Exposure Time	UltraShort: 1μs~2.4μs, Actual Steps: 0.1μs Standard: 3μs~20μs, Decimation 1×1 Actual Steps: 1μs, Decimation 2×2 Actual Steps: 1 row period; Standard: 21μs~1s, Actual Steps: 1 row period
Gain	0dB~24dB. Default: 0dB, Step: 0.1dB
Binning	Sensor: 1×1, 2×2
Decimation	Sensor: 1×1, 2×2
Synchronization	Hardware trigger, software trigger
PIV Mode	Support Continuous and Trigger The first frame exposure time can be set, Range: 50μs ~ 1000μs, Actual Step: 1 row period
PIV Interframing Time	110 ns
PIV Jitter	Maximum 20ns
PIV Gain	Support to set the first frame gain and the second frame gain respectively, range 0-48dB
I/O	1 input and 1 output with opto-isolated, 1 bidirectional programmable GPIO
Operating Temp.	0°C~+50°C

© 2026 China Daheng Group, Inc. Beijing Image Vision Technology Branch

Storage Temp.	-20°C~+70°C
Operating Humidity	10%~80%
Camera Power Requirements	12VDC-10% ~ 24VDC+10%
Typical Power	9.9W @ 24VDC (fan enable) 10.7W @ 24VDC (fan disable)
Lens Mount	C
Data Interface	Gigabit Ethernet (1000Mbit/s) or 10G Ethernet (10000Mbit/s)
Dimensions	60mm × 60mm × 54mm (without C mount length)
Weight	340g (with fan)
Operating System	Win10/Win11 32bit, 64bit OS, 64bit OS is recommended
Programmable Control	Image size, gain, exposure time, trigger polarity, flash polarity
Conformity	CE, RoHS, FCC, ICES, UKCA, GigE Vision, GenICam

Table 4-10 MARS-2440-35GTM-NF-V camera specifications

The sensor spectral response refer to 4.2.6 section.

4.2.11. MARS-2621-42GTM/C(-NF) \ MARS-2622-42GTM/C(-NF)

Specifications	MARS-2621-42GTC MARS-2622-42GTC MARS-2621-42GTC-NF MARS-2622-42GTC-NF	MARS-2621-42GTM MARS-2622-42GTM MARS-2621-42GTM-NF MARS-2622-42GTM-NF
Resolution	5120 × 5120	
Sensor Type	Gpixel GMAX0505, Global Shutter CMOS	
Max. Image Circle	1.1 inch	
Pixel Size	2.5μm × 2.5μm	
Frame Rate	41.8fps	
ADC Bit Depth	12bit	
Pixel Bit Depth	8bit, 12bit	
Mono/Color	Color	Mono
Pixel Formats	Bayer GB8/Bayer GB12	Mono8/Mono12

© 2026 China Daheng Group, Inc. Beijing Image Vision Technology Branch

Signal Noise Ratio	35.24dB	35.54dB
Exposure Time	14μs~1s, Actual Steps: 1 row period	
Gain	0dB~16dB. Default: 0dB, Step: 0.1dB	
Binning	1×1, 2×1 (No vertical Binning)	
Decimation	Horizontal FPGA, Vertical Sensor: 1×1, 1×2, 2×1, 2×2 (No vertical decimation)	
Synchronization	Hardware trigger, software trigger	
I/O	1 input and 1 output with opto-isolated, 1 bidirectional programmable GPIO	
Operating Temp.	0°C~+50°C	
Storage Temp.	-20°C~+70°C	
Operating Humidity	10%~80%	
Camera Power Requirements	12VDC-10% ~ 24VDC+10%	
Typical Power	10.0W @ 24VDC (without fan) 10.8W @ 24VDC (with fan)	
Lens Mount	C	
Data Interface	Gigabit Ethernet (1000Mbit/s) or 10G Ethernet (10000Mbit/s)	
Dimensions	60mm × 60mm × 54mm (without lens adapter or connectors)	
Weight	320g (without fan), 340g (with fan)	
Operating System	Win10/Win11 32bit, 64bit OS, 64bit OS is recommended	
Programmable Control	Image size, gain, exposure time, trigger polarity, flash polarity	
Conformity	CE, RoHS, FCC, ICES, UKCA, GigE Vision, GenICam	

Table 4-11 MARS-2621/2622-42GTM/C(-NF) camera specifications

Note: MARS-2622-42GTM/C(-NF) is the Grade2 sensor, MARS-2621-42GTM/C(-NF) is the Grade1 sensor. The only difference between the two cameras is the grade of the sensor. The difference between Grade1 and Grade2 sensors defined by sensor manufacturers is: Grade1 have no consecutive defect pixel cluster, and Grade2 may have up to 12 consecutive defect pixel cluster. The camera has static defect pixel correction function, and it will calibrated for the default factory parameters. If the scene parameters are changed, you can use the static defect pixel correction plugin to re-calibrate.

The camera's cluster distribution diagram refer to 4.2.3 section.

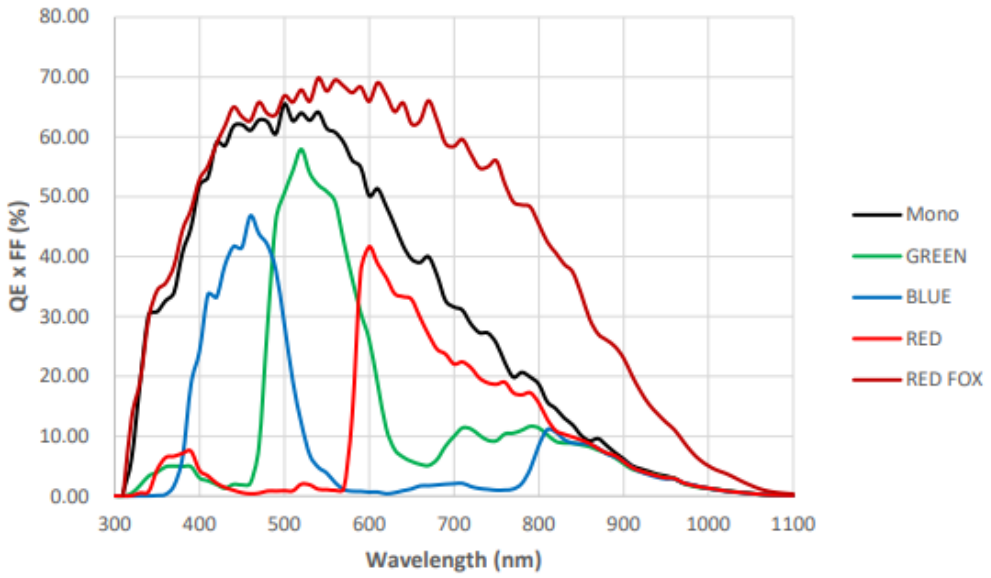

Figure 4-10 MARS-2621-42GTM/C(-NF) \ MARS-2622-42GTM/C(-NF) sensor spectral response

4.2.12. MARS-2621-42GTM(-NF)-NIR \ MARS-2622-42GTM(-NF)-NIR

Specifications	MARS-2621-42GTM-NIR MARS-2621-42GTM-NF -NIR	MARS-2622-42GTM-NIR MARS-2622-42GTM-NF -NIR
Resolution	5120 × 5120	
Sensor Type	Gpixel GMAX0505, Global Shutter CMOS	
Max. Image Circle	1.1 inch	
Pixel Size	2.5μm × 2.5μm	
Frame Rate	41.8fps	
ADC Bit Depth	12bit	
Pixel Bit Depth	8bit, 12bit	
Mono/Color	Mono	
Pixel Formats	Mono8/Mono12	
Signal Noise Ratio	35.54dB	
Exposure Time	14μs~1s, Actual Steps: 1 row period	
Gain	0dB~16dB. Default: 0dB, Step: 0.1dB	
Binning	1×1, 2×1 (No vertical Binning)	
Decimation	Horizontal FPGA, Vertical Sensor: 1×1, 1×2, 2×1, 2×2 (No vertical decimation)	

Synchronization	Hardware trigger, software trigger
I/O	1 input and 1 output with opto-isolated, 1 bidirectional programmable GPIO
Operating Temp.	0°C~+50°C
Storage Temp.	-20°C~+70°C
Operating Humidity	10%~80%
Camera Power Requirements	12VDC-10% ~ 24VDC+10%
Typical Power	10.0W @ 24VDC (without fan) 10.8W @ 24VDC (with fan)
Lens Mount	C
Data Interface	Gigabit Ethernet (1000Mbit/s) or 10G Ethernet (10000Mbit/s)
Dimensions	60mm × 60mm × 54mm (without lens adapter or connectors)
Weight	320g (without fan), 340g (with fan)
Operating System	Win10/Win11 32bit, 64bit OS, 64bit OS is recommended
Programmable Control	Image size, gain, exposure time, trigger polarity, flash polarity
Conformity	CE, RoHS, FCC, ICES, UKCA, GigE Vision, GenICam

Table 4-12 MARS-2621/2622-42GTM(-NF)-NIR camera specifications

Note: MARS-2622-42GTM(-NF)-NIR is the Grade2 sensor, MARS-2621-42GTM(-NF)-NIR is the Grade1 sensor. The only difference between the two cameras is the grade of the sensor. The difference between Grade1 and Grade2 sensors defined by sensor manufacturers is: Grade1 have no consecutive defect pixel cluster, and Grade2 may have up to 12 consecutive defect pixel cluster. The camera has static defect pixel correction function, and it will calibrated for the default factory parameters. If the scene parameters are changed, you can use the static defect pixel correction plugin to re-calibrate.

The camera's cluster distribution diagram refer to 4.2.3 section.

The sensor spectral response refer to 4.2.8 section.

4.2.13. MARS-2621-42GTM/C-S \ MARS-2622-42GTM/C-S

Specifications	MARS-2621-42GTC-S MARS-2622-42GTC-S	MARS-2621-42GTM-S MARS-2622-42GTM-S
Resolution	5120 × 5120	
Sensor Type	Gpixel GMAX0505, Global Shutter CMOS	
Max. Image Circle	1.1 inch	

Pixel Size	2.5μm × 2.5μm	
Frame Rate	41.8fps	
ADC Bit Depth	12bit	
Pixel Bit Depth	8bit, 12bit	
Mono/Color	Color	Mono
Pixel Formats	Bayer GB8/Bayer GB12	Mono8/Mono12
Signal Noise Ratio	35.35dB	35.61dB
Exposure Time	14μs~1s, Actual Steps: 1 row period	
Gain	0dB~16dB. Default: 0dB, Step: 0.1dB	
Binning	1×1, 2×1 (No vertical Binning)	
Decimation	Horizontal FPGA, Vertical Sensor: 1×1, 1×2, 2×1, 2×2	
Synchronization	Hardware trigger, software trigger	
I/O	1 input and 1 output with opto-isolated, 1 bidirectional programmable GPIO	
Operating Temp.	0°C~+50°C	
Storage Temp.	-20°C~+70°C	
Operating Humidity	10%~80%	
Camera Power Requirements	12VDC-10% ~ 24VDC+10%	
Power Consumption	< 12.7W @ 24VDC	
Lens Mount	MARS-GT-S: C Mount MARS-GT-S V8: Tilt angle (adjustable from 0 to 8° vertically)	
Data Interface	Gigabit Ethernet (1000Mbit/s) or 10G Ethernet (10000Mbit/s)	
Dimensions	40mm × 70mm × 76.05mm (without lens adapter or connectors)	
Weight	288g	
Operating System	Win10/Win11 32bit, 64bit OS, 64bit OS is recommended	
Programmable Control	Image size, gain, exposure time, trigger polarity, flash polarity	

© 2026 China Daheng Group, Inc. Beijing Image Vision Technology Branch

Conformity	CE, RoHS, FCC, ICES, UKCA, GigE Vision, GenICam

Table 4-13 MARS-2621/2622-42GTM/C-S camera specifications

The camera's cluster distribution diagram refer to 4.2.3 section.

The sensor spectral response refer to 4.2.8 section.

4.2.14. MARS-2621-42GTM-NIR-S \ MARS-2622-42GTM-NIR-S

Specifications	MARS-2621-42GTM-NIR-S	MARS-2622-42GTM-NIR-S
Resolution	5120 × 5120	
Sensor Type	Gpixel GMAX0505, Global Shutter CMOS	
Max. Image Circle	1.1 inch	
Pixel Size	2.5μm × 2.5μm	
Frame Rate	41.8fps	
ADC Bit Depth	12bit	
Pixel Bit Depth	8bit, 12bit	
Mono/Color	Mono	
Pixel Formats	Mono8/Mono12	
Signal Noise Ratio	35.61dB	
Exposure Time	14μs~1s, Actual Steps: 1 row period	
Gain	0dB~16dB. Default: 0dB, Step: 0.1dB	
Binning	1×1, 2×1 (No vertical Binning)	
Decimation	Horizontal FPGA, Vertical Sensor: 1×1, 1×2, 2×1, 2×2	
Synchronization	Hardware trigger, software trigger	
I/O	1 input and 1 output with opto-isolated, 1 bidirectional programmable GPIO	
Operating Temp.	0°C~+50°C	
Storage Temp.	-20°C~+70°C	
Operating Humidity	10%~80%	

© 2026 China Daheng Group, Inc. Beijing Image Vision Technology Branch

Camera Power Requirements	12VDC-10% ~ 24VDC+10%
Power Consumption	< 12.7W @ 24VDC
Lens Mount	MARS-GT-S: C Mount MARS-GT-S V8: Tilt angle (adjustable from 0 to 8° vertically)
Data Interface	Gigabit Ethernet (1000Mbit/s) or 10G Ethernet (10000Mbit/s)
Dimensions	40mm × 70mm × 76.05mm (without lens adapter or connectors)
Weight	288g
Operating System	Win10/Win11 32bit, 64bit OS, 64bit OS is recommended
Programmable Control	Image size, gain, exposure time, trigger polarity, flash polarity
Conformity	CE, RoHS, FCC, ICES, UKCA, GigE Vision, GenICam

Table 4-14 MARS-2621/2622-42GTM-NIR-S camera specifications

The camera's cluster distribution diagram refer to 4.2.3 section.

The sensor spectral response refer to 4.2.8 section.

4.2.15. MARS-5000-24GTM/C(-NF/TF)

Specifications	MARS-5000-24GTC MARS-5000-24GTC-NF	MARS-5000-24GTM MARS-5000-24GTM-NF
Resolution	7008 × 7000	
Sensor Type	Gpixel GMAX3249, Global Shutter CMOS	
Max. Image Circle	2 inch	
Pixel Size	3.2μm × 3.2μm	
Frame Rate	24.7fps	
ADC Bit Depth	12bit	
Pixel Bit Depth	8bit, 12bit	
Mono/Color	Color	Mono
Pixel Formats	Bayer GB8 / Bayer GB12 / Mono8 / Mono12 / RGB8 / BGR8 / Bayer GB12Packed / Mono12Packed	Mono8 / Mono12 / Mono12Packed
Signal Noise Ratio	40.42dB	40.05dB
Exposure Time	14μs~1s, Actual Steps: 1 row period	

© 2026 China Daheng Group, Inc. Beijing Image Vision Technology Branch

Gain	0dB~16dB. Default: 0dB, Step: 0.1dB
Binning	1×1, 1×2, 2×1, 2×2
Decimation	Horizontal FPGA, Vertical Sensor: 1×1, 1×2, 2×1, 2×2
Synchronization	Hardware trigger, software trigger
I/O	1 input and 1 output with opto-isolated, 1 bidirectional programmable GPIO
Operating Temp.	0°C~+50°C
Storage Temp.	-20°C~+70°C
Operating Humidity	10%~80%
Camera Power Requirements	12VDC-10% ~ 24VDC+10%
Power Consumption	< 15W @ 12VDC (without fan) < 16W @ 12VDC (with fan)
Lens Mount	M58-D1 (11.48mm, priority selection by default) M58 (19.5mm) F
Data Interface	Gigabit Ethernet (1000Mbit/s) or 10G Ethernet (10000Mbit/s)
Dimensions	74mm × 74mm × 59mm (without M58 mount length or fan height)
Weight	540g
Operating System	Win10/Win11 32bit, 64bit OS, 64bit OS is recommended
Programmable Control	Image size, gain, exposure time, trigger polarity, flash polarity
Conformity	CE, RoHS, FCC, ICES, UKCA, GigE Vision, GenICam

Table 4-15 MARS-5000-24GTC(-NF) camera specifications

Specifications	MARS-5000-24GTC-TF	MARS-5000-24GTM-TF
Resolution	7008 × 7000	
Sensor Type	Gpixel GMAX3249, Global Shutter CMOS	
Max. Image Circle	2 inch	
Pixel Size	3.2μm × 3.2μm	
Frame Rate	24.7fps	
ADC Bit Depth	12bit	

Pixel Bit Depth	8bit, 12bit	
Mono/Color	Color	Mono
Pixel Formats	Bayer GB8 / Bayer GB12 / Mono8 / Mono12 / RGB8 / BGR8 / Bayer GB12Packed / Mono12Packed	Mono8 / Mono12 / Mono12Packed
Signal Noise Ratio	40.42dB	40.05dB
Exposure Time	14μs~1s, Actual Steps: 1 row period	
Gain	0dB~16dB. Default: 0dB, Step: 0.1dB	
Binning	1×1, 1×2, 2×1, 2×2	
Decimation	Horizontal FPGA, Vertical Sensor: 1×1, 1×2, 2×1, 2×2	
Synchronization	Hardware trigger, software trigger	
I/O	1 input and 1 output with opto-isolated, 1 bidirectional programmable GPIO	
Operating Temp.	0°C~+45°C	
Storage Temp.	-20°C~+70°C	
Operating Humidity	10%~80%	
Camera Power Requirements	+24VDC (±10%)	
Power Consumption	< 38.4W @ 24VDC (TEC+Fan)	
Lens Mount	M58 (19.5mm) F	
Data Interface	Gigabit Ethernet (1000Mbit/s) or 10G Ethernet (10000Mbit/s)	
Dimensions	M58: 85mm × 85mm × 114.1mm F: 85mm × 85mm × 141.2mm	
Weight	M58: 1220g F: 1314g	
Operating System	Win10/Win11 32bit, 64bit OS, 64bit OS is recommended	
Programmable Control	Image size, gain, exposure time, trigger polarity, flash polarity	
Conformity	CE, RoHS, FCC, ICES, UKCA, GigE Vision, GenICam	

Table 4-16 MARS-5000-24GTC-TF camera specifications

1) Monochrome camera

As shown below, allowed defect numbers in cluster are 2~4 (cluster with 4 consecutive defect pixels in a row is not allowed (NOK)).

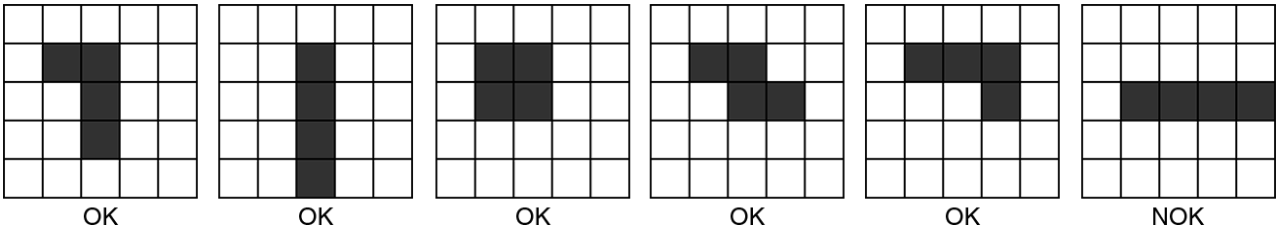

Figure 4-11 MARS-5000-24GTM(-NF/TF) clusters distribution diagram

2) Color camera

Examples 1: Maximum cluster size within same Bayer color plane is 4, but cluster with 4 consecutive defect pixels in a row is not allowed.

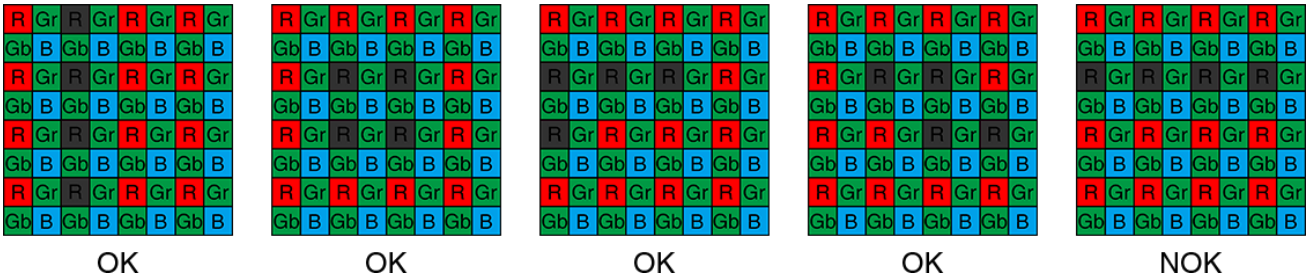

Figure 4-12 MARS-5000-24GTC(-NF/TF) clusters within same Bayer color plane distribution diagram

Examples 2: When different Bayer color plane combined, maximum cluster size is 13 in any given 5x5 pixel array.

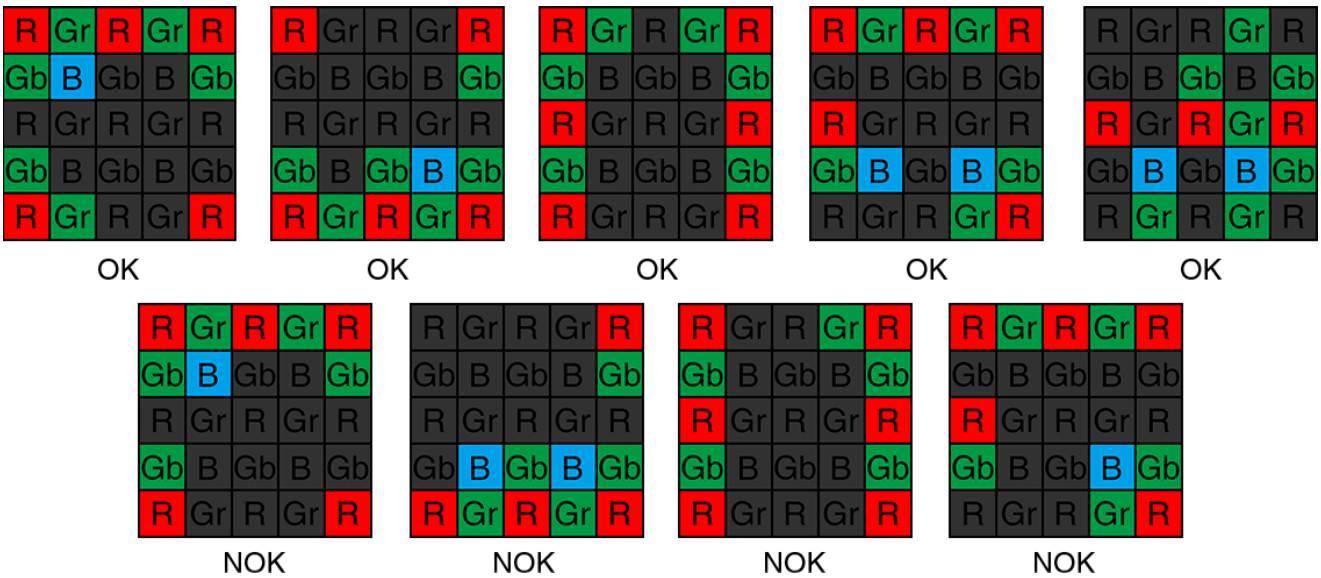

Figure 4-13 MARS-5000-24GTC(-NF/TF) clusters within different Bayer color plane distribution diagram

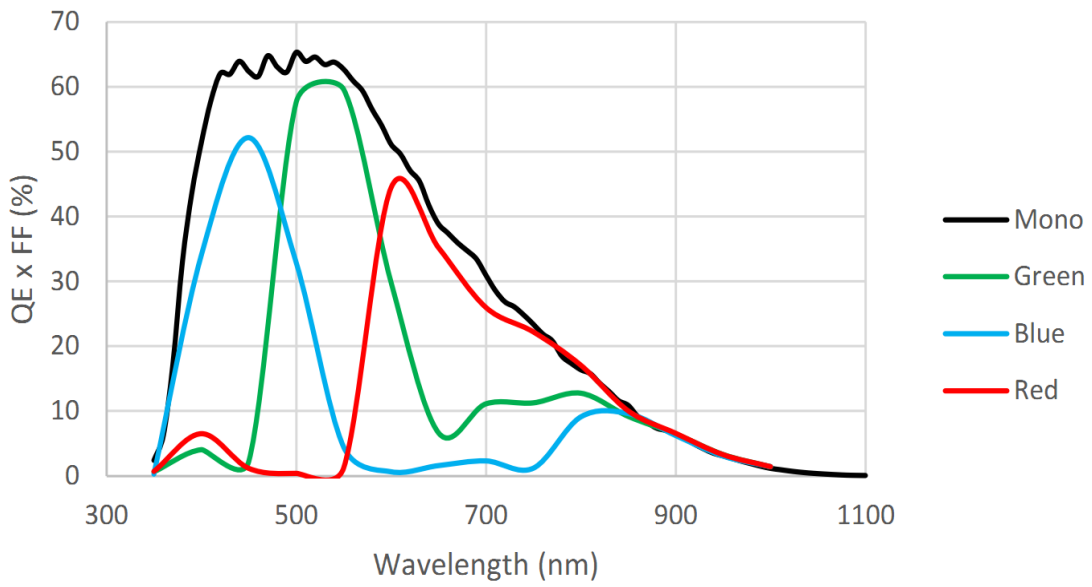

Figure 4-14 MARS-5000-24GTM/C(-NF/TF) sensor spectral response

4.2.16. MARS-6100-18GTM/C-TF

Specifications	MARS-6100-18GTC-TF	MARS-6100-18GTM-TF
Resolution	9568 × 6380	
Sensor Type	Sony IMX455 Rolling shutter CMOS	
Max. Image Circle	2.7 inch	
Pixel Size	3.76μm × 3.76μm	
Frame Rate	17.9fps	
ADC Bit Depth	16bit / 14bit / 12bit	
Pixel Bit Depth	16bit / 14bit / 12bit	
Mono/Color	Color	Mono
Pixel Formats	RG8 / RG12 / RGB8 / BGR8 / RG14 / RG16 / Mono8	Mono8 / Mono12 / Mono14 / Mono16
Signal Noise Ratio	47.10dB	46.86dB
Exposure Time	34μs~300s, Actual Steps: 1 row period	
Gain	0dB~36dB. Default: 0dB, Step: 0.1dB	
Binning	1x1, 1x2, 2x1, 2x2, 1x4, 4x1, 2x4, 4x2, 4x4	
Decimation	1x1, 2x2	

© 2026 China Daheng Group, Inc. Beijing Image Vision Technology Branch

Synchronization	Hardware trigger, software trigger
I/O	1 input and 1 output with opto-isolated, 1 bidirectional programmable GPIO
Operating Temp.	0°C~+45°C
Storage Temp.	-20°C~+70°C
Operating Humidity	10%~80%
Camera Power Requirements	+24VDC (±10%)
Power Consumption	< 38W @ 24VDC
Lens Mount	M58（19.5mm） F
Data Interface	Gigabit Ethernet (1000Mbit/s) or 10G Ethernet (10000Mbit/s)
Dimensions	M58: 100mm × 100mm × 113.95mm, F: 100mm × 100mm × 141mm
Weight	1590 g
Operating System	Win10/Win11 32bit, 64bit OS, 64bit OS is recommended
Programmable Control	Image size, gain, exposure time, trigger polarity, flash polarity
Conformity	CE, RoHS, FCC, ICES, UKCA, GigE Vision, GenICam

Table 4-17 MARS-6100-18GTM/C-TF camera specifications

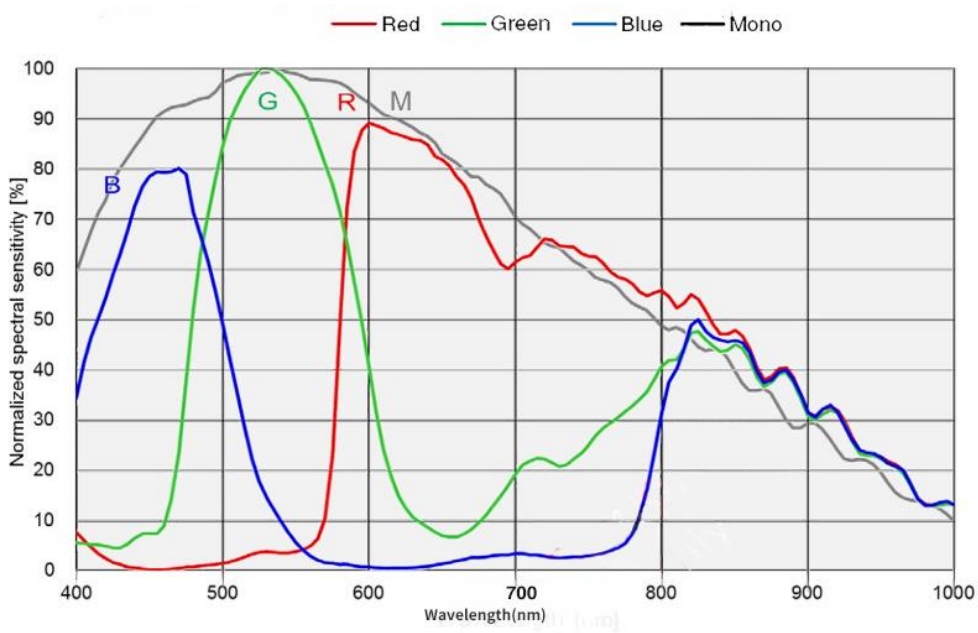

Figure 4-15 MARS-6100-18GTM/C-TF sensor spectral response

4.2.17. MARS-6500/6501-18GTM/C(-NF/TF)

Specifications	MARS-6500-18GTC MARS-6501-18GTC MARS-6500-18GTC-NF MARS-6501-18GTC-NF	MARS-6500-18GTM MARS-6501-18GTM MARS-6500-18GTM-NF MARS-6501-18GTM-NF
Resolution	9344 × 7000	
Sensor Type	Gpixel GMAX3265, Global Shutter CMOS	
Max. Image Circle	2.3 inch	
Pixel Size	3.2μm × 3.2μm	
Frame Rate	17.73fps	
ADC Bit Depth	12bit	
Pixel Bit Depth	8bit, 12bit	
Mono/Color	Color	Mono
Pixel Formats	Bayer GB8 / Bayer GB12 / Mono8 / Mono12 / RGB8 / BGR8 / Bayer GB12Packed / Mono12Packed	Mono8 / Mono12 / Mono12Packed
Signal Noise Ratio	40.42dB	40.05dB
Exposure Time	14μs~1s, Actual Steps: 1 row period	
Gain	0dB~16dB. Default: 0dB, Step: 0.1dB	
Binning	1×1, 1×2, 2×1, 2×2	
Decimation	Horizontal FPGA, Vertical Sensor: 1×1, 1×2, 2×1, 2×2	
Synchronization	Hardware trigger, software trigger	
I/O	1 input and 1 output with opto-isolated, 1 bidirectional programmable GPIO	
Operating Temp.	0°C~+50°C	
Storage Temp.	-20°C~+70°C	
Operating Humidity	10%~80%	
Camera Power Requirements	12VDC-10% ~ 24VDC+10%	
Power Consumption	< 15W @ 12VDC (without fan) < 16W @ 12VDC (with fan)	
Lens Mount	M58-D1 (11.48mm, priority selection by default) M58 (19.5mm)	

© 2026 China Daheng Group, Inc. Beijing Image Vision Technology Branch

	F
Data Interface	Gigabit Ethernet (1000Mbit/s) or 10G Ethernet (10000Mbit/s)
Dimensions	74mm × 74mm × 59mm (without M58 mount length or fan height)
Weight	540g
Operating System	Win10/Win11 32bit, 64bit OS, 64bit OS is recommended
Programmable Control	Image size, gain, exposure time, trigger polarity, flash polarity
Conformity	CE, RoHS, FCC, ICES, UKCA, GigE Vision, GenICam

Table 4-18 MARS-6500/6501-18GTM/C(-NF) camera specifications

Specifications	MARS-6500-18GTC-TF MARS-6501-18GTC-TF	MARS-6500-18GTM-TF MARS-6501-18GTM-TF
Resolution	9344 × 7000	
Sensor Type	Gpixel GMAX3265, Global Shutter CMOS	
Max. Image Circle	2.3 inch	
Pixel Size	3.2μm × 3.2μm	
Frame Rate	17.73fps	
ADC Bit Depth	12bit	
Pixel Bit Depth	8bit, 12bit	
Mono/Color	Color	Mono
Pixel Formats	Bayer GB8 / Bayer GB12 / Mono8 / Mono12 / RGB8 / BGR8 / Bayer GB12Packed / Mono12Packed	Mono8 / Mono12 / Mono12Packed
Signal Noise Ratio	40.42dB	40.05dB
Exposure Time	14μs~1s, Actual Steps: 1 row period	
Gain	0dB~16dB. Default: 0dB, Step: 0.1dB	
Binning	1×1, 1×2, 2×1, 2×2	
Decimation	Horizontal FPGA, Vertical Sensor: 1×1, 1×2, 2×1, 2×2	
Synchronization	Hardware trigger, software trigger	

© 2026 China Daheng Group, Inc. Beijing Image Vision Technology Branch

I/O	1 input and 1 output with opto-isolated, 1 bidirectional programmable GPIO
Operating Temp.	0°C~+45°C
Storage Temp.	-20°C~+70°C
Operating Humidity	10%~80%
Camera Power Requirements	+24VDC (±10%)
Power Consumption	< 38.4W @ 24VDC (TEC+Fan)
Lens Mount	M58 (19.5mm) F
Data Interface	Gigabit Ethernet (1000Mbit/s) or 10G Ethernet (10000Mbit/s)
Dimensions	M58: 85mm × 85mm × 114.1mm F: 85mm × 85mm × 141.2mm
Weight	M58: 1220g F: 1314g
Operating System	Win10/Win11 32bit, 64bit OS, 64bit OS is recommended
Programmable Control	Image size, gain, exposure time, trigger polarity, flash polarity
Conformity	CE, RoHS, FCC, ICES, UKCA, GigE Vision, GenICam

Table 4-19 MARS-6500/6501-18GTM/C-TF camera specifications

Note: MARS-6501-18GTM/C(-TF) is the Grade2 sensor, MARS-6500-18GTM/C(-TF) is the Grade1 sensor. The only difference between the two cameras is the grade of the sensor. The difference between Grade1 and Grade2 sensors defined by sensor manufacturers is: Grade1 have no consecutive defect pixel cluster, and Grade2 may have up to 13 consecutive defect pixel cluster. The camera has static defect pixel correction function, and it will calibrated for the default factory parameters. If the scene parameters are changed, you can use the static defect pixel correction plugin to re-calibrate.

The camera's cluster distribution diagram refer to 4.2.15 section.

The sensor spectral response refer to 4.2.15 section.

4.2.18. MARS-15100-6GTM/C-TF

Specifications	MARS-15100-18GTC-TF	MARS15100-18GTM-TF
Resolution	14192 × 10640	
Sensor Type	Sony IMX411 Rolling shutter CMOS	
Max. Image Circle	4.2 inch	

Pixel Size	3.76μm × 3.76μm	
Frame Rate	6.1fps	
ADC Bit Depth	16bit, 14bit, 12bit	
Pixel Bit Depth	16bit, 14bit, 12bit	
Mono/Color	Color	Mono
Pixel Formats	Bayer RG8 / Bayer RG14 / Bayer RG16 / YUV422_8 / Mono8	Mono8 / Mono14 / Mono16
Signal Noise Ratio	46.424dB	46.106dB
Exposure Time	60μs~300s, Actual Steps: 1 row period	
Gain	0dB~24dB. Default: 0dB, Step: 0.1dB	
Binning	1×1, 1×2, 1×4, 2×1, 2×2, 2×4, 4×1, 4×2, 4×4	
Decimation	Not Supported	
Synchronization	Hardware trigger, software trigger	
I/O	1 input and 1 output with opto-isolated, 1 bidirectional programmable GPIO, 1 RS232	
Operating Temp.	0°C~+45°C	
Storage Temp.	-20°C~+70°C	
Operating Humidity	10%~80%	
Camera Power Requirements	+24VDC (±10%)	
Power Consumption	< 42.4W @ 24VDC (TEC+Fan)	
Lens Mount	M72 (19.5mm) F	
Data Interface	Gigabit Ethernet (1000Mbit/s) or 10G Ethernet (10000Mbit/s)	
Dimensions	M72: 120mm × 120mm × 116.3mm F: 120mm × 120mm × 143.38mm	
Weight	2380g	
Operating System	Win10/Win11 32bit, 64bit OS, 64bit OS is recommended	
Programmable Control	Image size, gain, exposure time, trigger polarity, flash polarity	

© 2026 China Daheng Group, Inc. Beijing Image Vision Technology Branch

Conformity	CE, RoHS, FCC, ICES, UKCA, GigE Vision, GenICam

Table 4-20 MARS-15100-6GTM/C-TF camera specifications

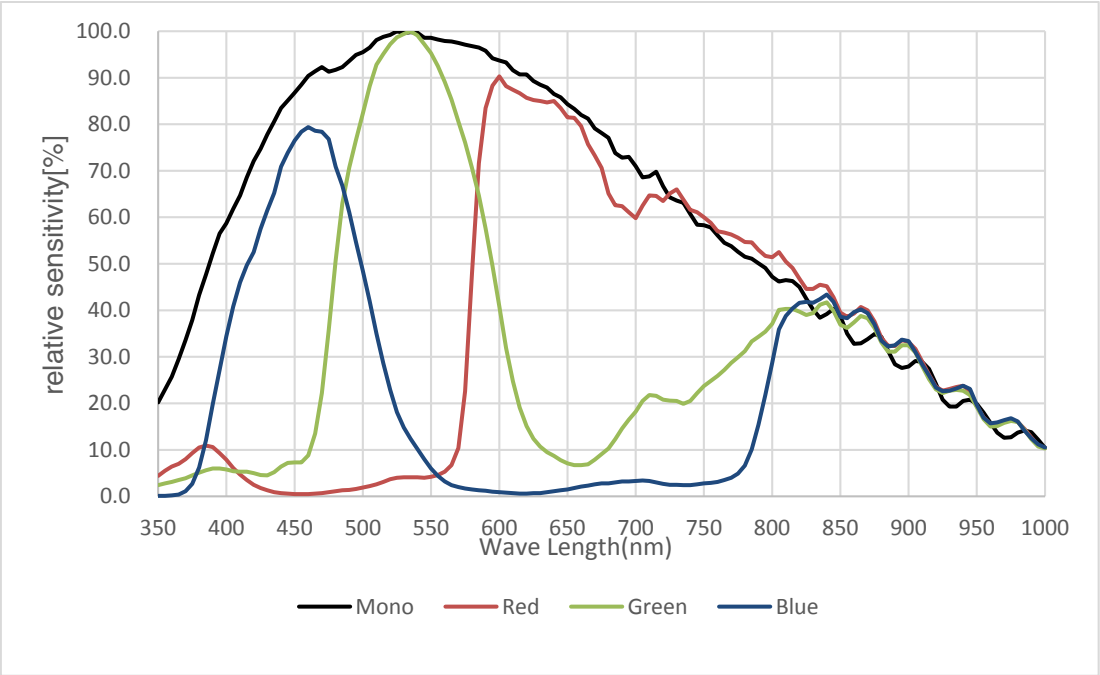

Figure 4-16 MARS-15100-6GTM/C-TF sensor spectral response

4.3. MARS-GT-SWIR Series

4.3.1. MARS-321-176GTM-TN-SWIR

Specifications	MARS-321-176GTM-TN-SWIR
Resolution	2080 × 1544
Sensor	Sony IMX993 global shutter CMOS
Max. Image Circle	Diagonal 8.9mm
Pixel Size	3.45µm × 3.45µm
Frame Rate	176fps
ADC Bit Depth	10bit, 12bit
Pixel Bit Depth	8bit, 10bit, 12bit
Pixel Formats	Mono8 / Mono10 / Mono10 Packed / Mono12 / Mono12 Packed
Signal Noise Ratio	46.30dB
Exposure Time	Ultra short: 8µs ~ 100µs, Actual Steps: 1µs Standard: 21µs ~ 1s s, Actual Steps: 2 row period
Gain	Digital gain: 0dB ~ 24dB, Default: 0dB, Step: 0.1dB Analog gain: 0dB ~ 24dB, Default: 0dB, Step: 0.1dB
Binning	1×1, 1×2, 1×4, 2×1, 2×2, 2×4, 4×1, 4×2, 4×4
Decimation	Sensor: 1×1, 2×2

Synchronization	Hardware trigger, software trigger
I/O	1 input and 1 output with opto-isolated, 1 bidirectional programmable GPIO
Operating Temp.	0°C ~ +45°C
Storage Temp.	-20°C ~ +70°C
Operating Humidity	10% ~ 80%
Camera Power Requirements	24VDC±10%
Power Consumption	10.5W@24VDC (Ambient@30°C, and TEC cooling@15°C)
Lens Mount	C
Color filter/ translucent film	-
Data Interface	Gigabit Ethernet (1000Mbit/s) or 10G Ethernet (10000Mbit/s)
Dimensions	62mm × 62mm × 80.5mm (without C mount length)
Weight	495g
Operating System	Win10Win/11 32bit, 64bit OS, 64bit OS is recommended
Programmable Control	Image size, gain, exposure time, trigger polarity, flash polarity
Conformity	CE, RoHS, FCC, ICES, UKCA, GigE Vision, GenICam

Table 4-21 MARS-321-176GTM-TN-SWIR camera specifications

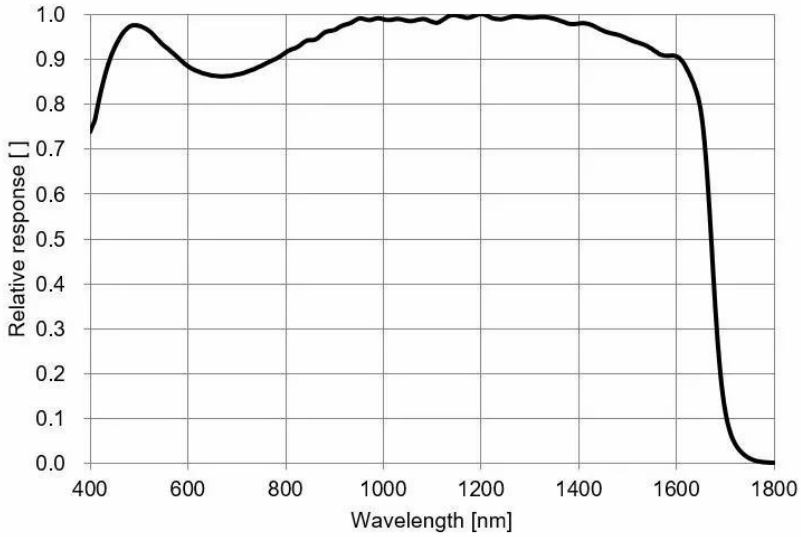

Figure 4-17 MARS-321-176GTM-TN-SWIR sensor spectral response

4.3.2. MARS-533-134GTM-TN-SWIR \ MARS-533-170GTM-TN-SWIR

Specifications	MARS-533-134GTM-TN-SWIR	MARS-533-170GTM-TN-SWIR
Resolution	2592 × 2056	
Sensor	Sony IMX992 global shutter CMOS	
Max. Image Circle	Diagonal 11.4mm	

Pixel Size	3.45μm × 3.45μm	
Frame Rate	134fps	170fps
ADC Bit Depth	10bit、12bit	
Pixel Bit Depth	8bit、10bit、12bit	
Pixel Formats	Mono8 / Mono10 / Mono10 Packed / Mono12 / Mono12 Packed	
Signal Noise Ratio	46.41dB	
Exposure Time	Ultra short: 8μs ~ 100μs, Actual Steps: 1μs Standard: 21μs ~ 1s s, Actual Steps: 2 row period	
Gain	Digital gain: 0dB ~ 24dB, Default: 0dB, Step: 0.1dB Analog gain: 0dB ~ 24dB, Default: 0dB, Step: 0.1dB	
Binning	1×1, 1×2, 1×4, 2×1, 2×2, 2×4, 4×1, 4×2, 4×4	
Decimation	Sensor: 1×1, 2×2	
Synchronization	Hardware trigger, software trigger	
I/O	1 input and 1 output with opto-isolated, 1 bidirectional programmable GPIO	
Operating Temp.	0°C ~ +45°C	
Storage Temp.	-20°C ~ +70°C	
Operating Humidity	10% ~ 80%	
Camera Power Requirements	24VDC±10%	
Power Consumption	10.5W@24VDC (Ambient@30°C, and TEC cooling@15°C)	
Lens Mount	C	
Color filter/ translucent film	-	
Data Interface	Gigabit Ethernet (1000Mbit/s) or 10G Ethernet (10000Mbit/s)	
Dimensions	62mm × 62mm × 80.5mm (without C mount length)	
Weight	495g	
Operating System	Win10Win/11 32bit, 64bit OS, 64bit OS is recommended	
Programmable Control	Image size, gain, exposure time, trigger polarity, flash polarity	
Conformity	CE, RoHS, FCC, ICES, UKCA, GigE Vision, GenICam	

Table 4-22 MARS-533-134GTM-TN-SWIR \ MARS-533-170GTM-TN-SWIR camera specifications

The sensor spectral response refer to 4.3.1 section.

5. Dimensions

5.1. Camera Dimensions

The corresponding mechanical dimensions of each model are shown in the table below.

Models	Mount	Radiator	Dimensions
MARS-561-207GTM/C(-NF) \ MARS-900-120GTM/C(-NF) MARS-1261-90GTM/C(-NF) \ MARS-1610-52GTM/C(-NF) MARS-1840-630GTM/C(-NF) \ MARS-2020-42GTM/C(-NF) MARS-2440-35GTM/C(-NF) \ MARS-2621-42GTM/C(-NF) \ MARS-2440-35GTM-NF-V MARS-2622-42GTM/C(-NF) \ MARS-2621-42GTM(-NF)-NIR MARS-2622-42GTM(-NF)-NIR	C	No active cooling	A
		Fan	M
MARS-2621-42GTM/C-S \ MARS-2622-42GTM/C-S MARS-2621-42GTM-NIR-S \ MARS-2622-42GTM-NIR-S	C, Dip angle	No active cooling	B
MARS-5000-24GTM/C(-NF) MARS-6500-18GTM/C(-NF) MARS-6501-18GTM/C(-NF)	M58-D1 (Flange Distance: 11.48mm)	No active cooling	C
		Fan	D
	M58 (Flange Distance: 19.5mm)	No active cooling	E
		Fan	F
	F	No active cooling	G
		Fan	H
MARS-5000-24GTX-TF MARS-6500/6501-18GTX-TF	M58	TEC + Fan	I
	F	TEC + Fan	J
MARS-321-176GTM-TN-SWIR MARS-533-134GTM-TN-SWIR MARS-533-170GTM-TN-SWIR	C	TEC	K
MARS-170-662GTM/C \ MARS-280-409GTM/C	C	No active cooling	L
MARS-6100-18GTM/C-TF	M58	TEC + Fan	N
	F	TEC + Fan	O
MARS-15100-6GTM/C-TF	M72	TEC + Fan	P
	F	TEC + Fan	Q

© 2026 China Daheng Group, Inc. Beijing Image Vision Technology Branch

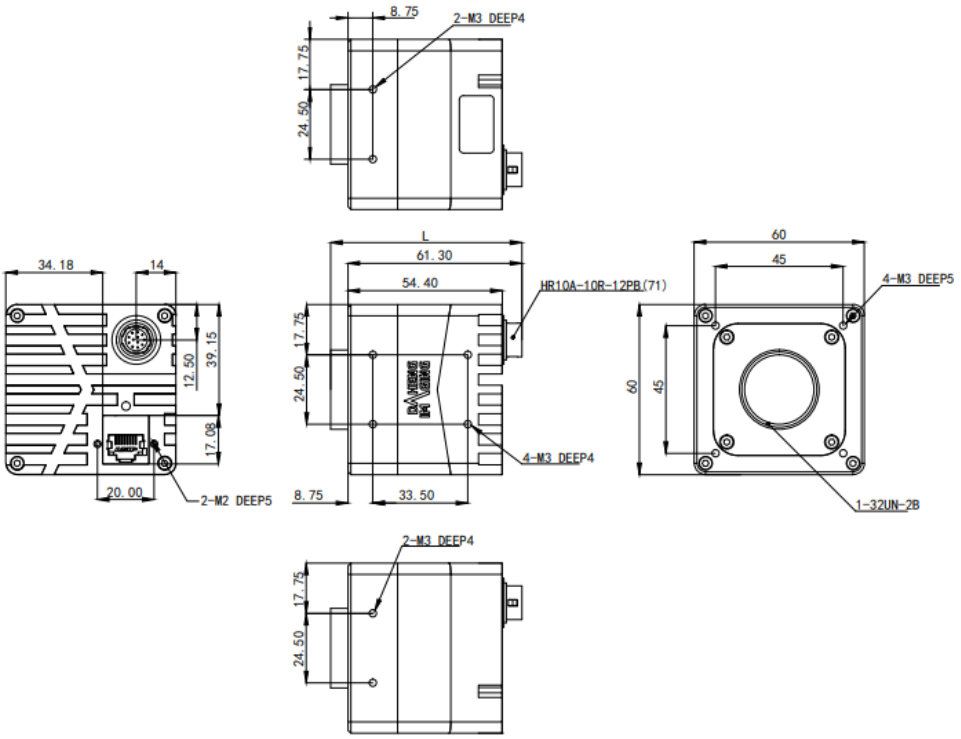

	MARS-561/900	MARS-1261	MARS-1840	MARS-2621/2622	MARS-1610/2020/2440
L	67.2	66.6	67.3	67.45	66.45

Figure 5-1 MARS-GT mechanical dimensions A

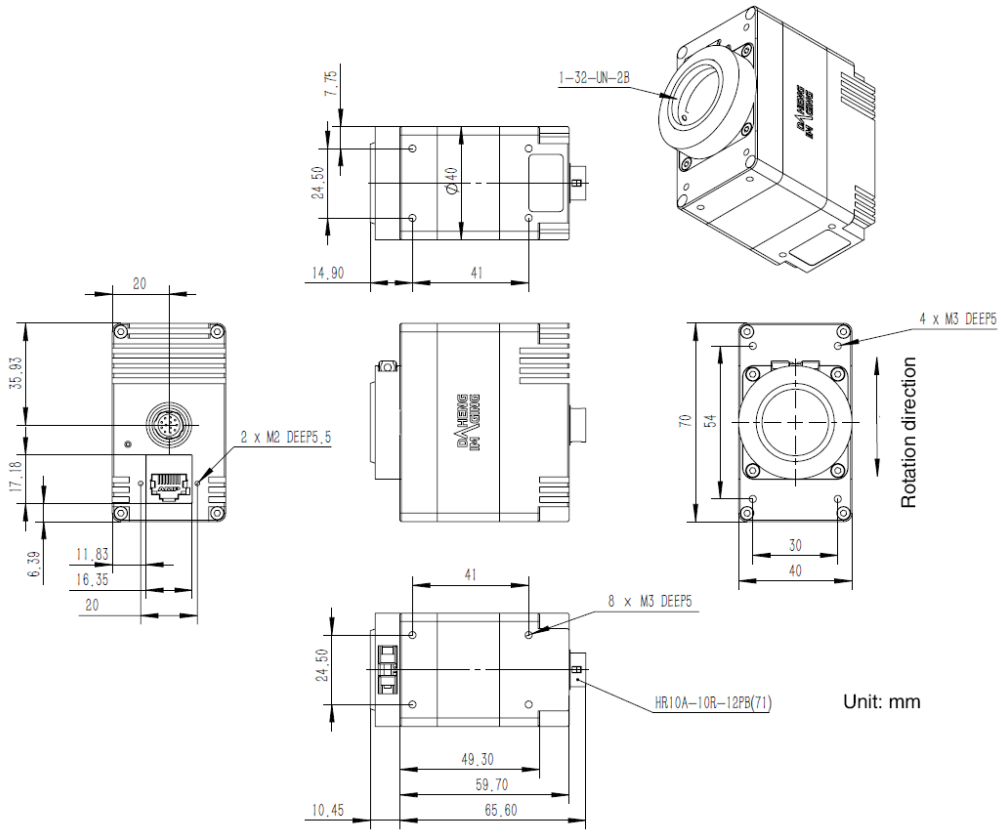

Figure 5-2 MARS-GT mechanical dimensions B

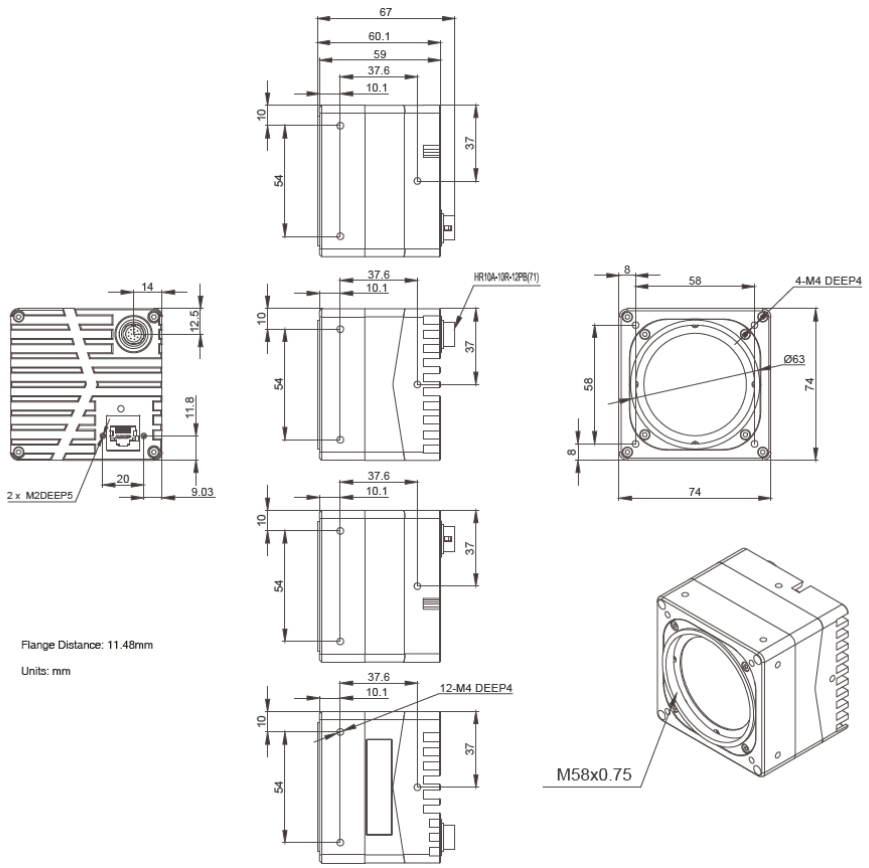

Figure 5-3 MARS-GT mechanical dimensions C

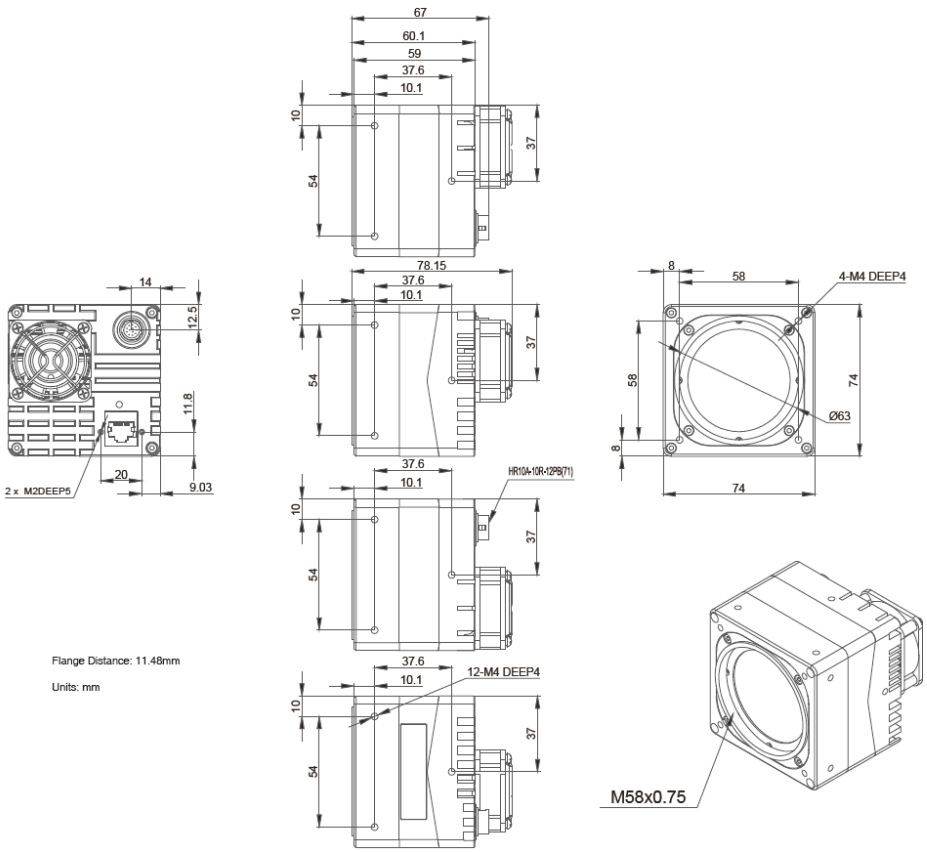

Figure 5-4 MARS-GT mechanical dimensions D

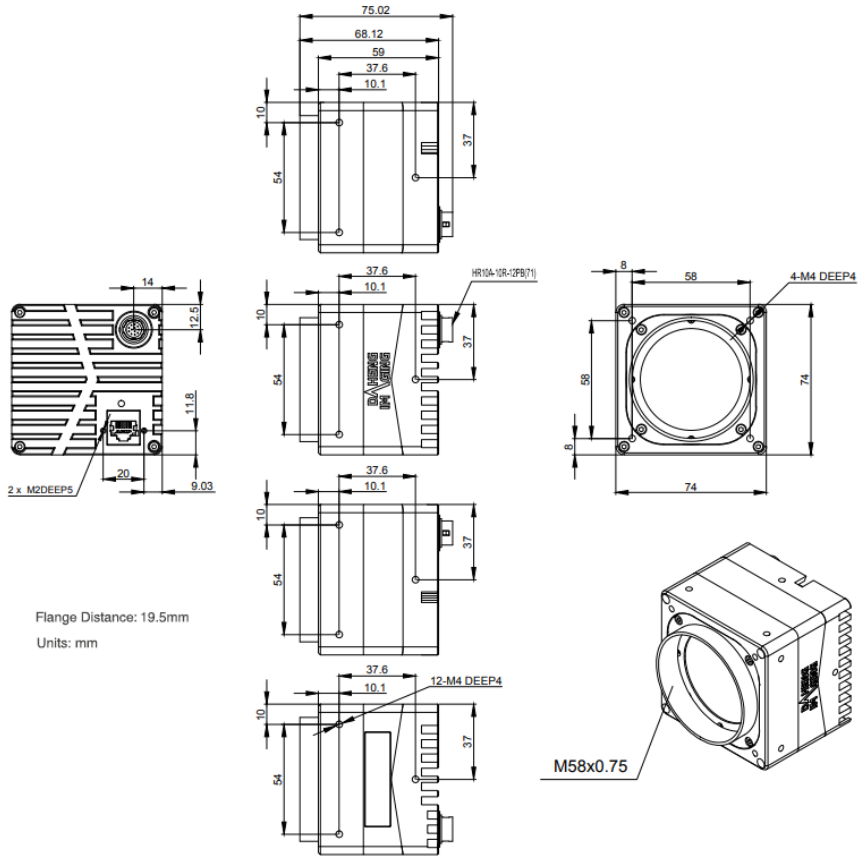

Figure 5-5 MARS-GT mechanical dimensions E

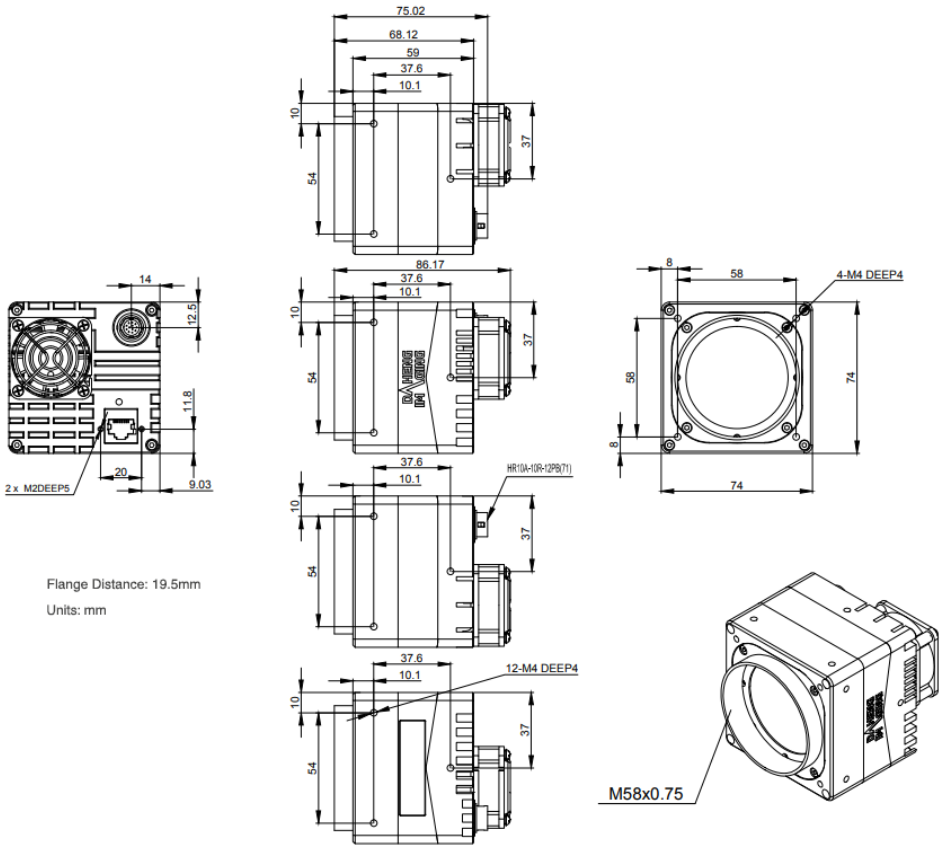

Figure 5-6 MARS-GT mechanical dimensions F

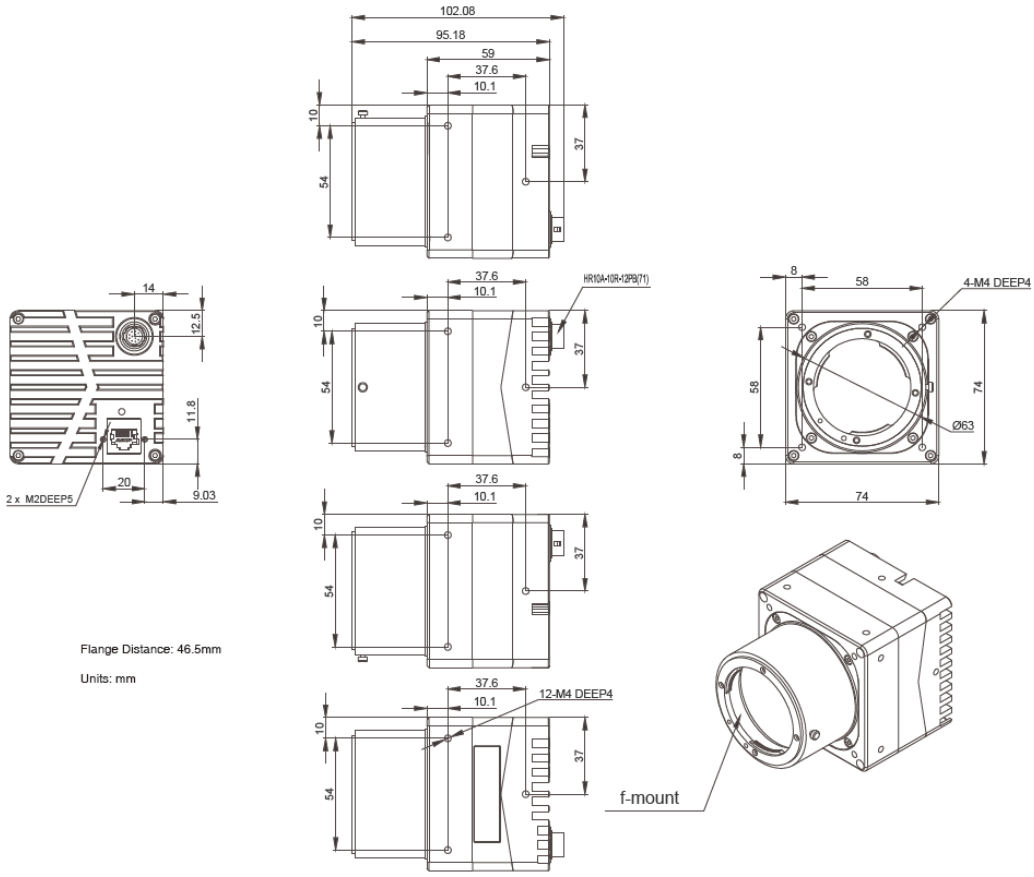

Figure 5-7 MARS-GT mechanical dimensions G

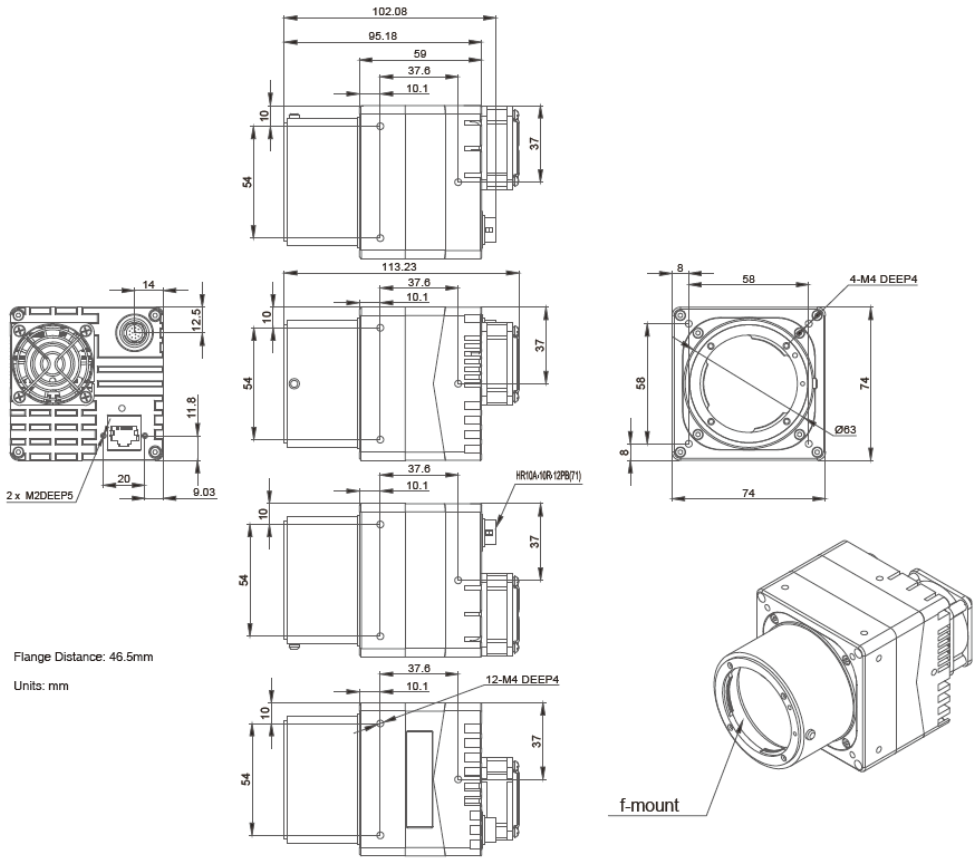

Figure 5-8 MARS-GT mechanical dimensions H

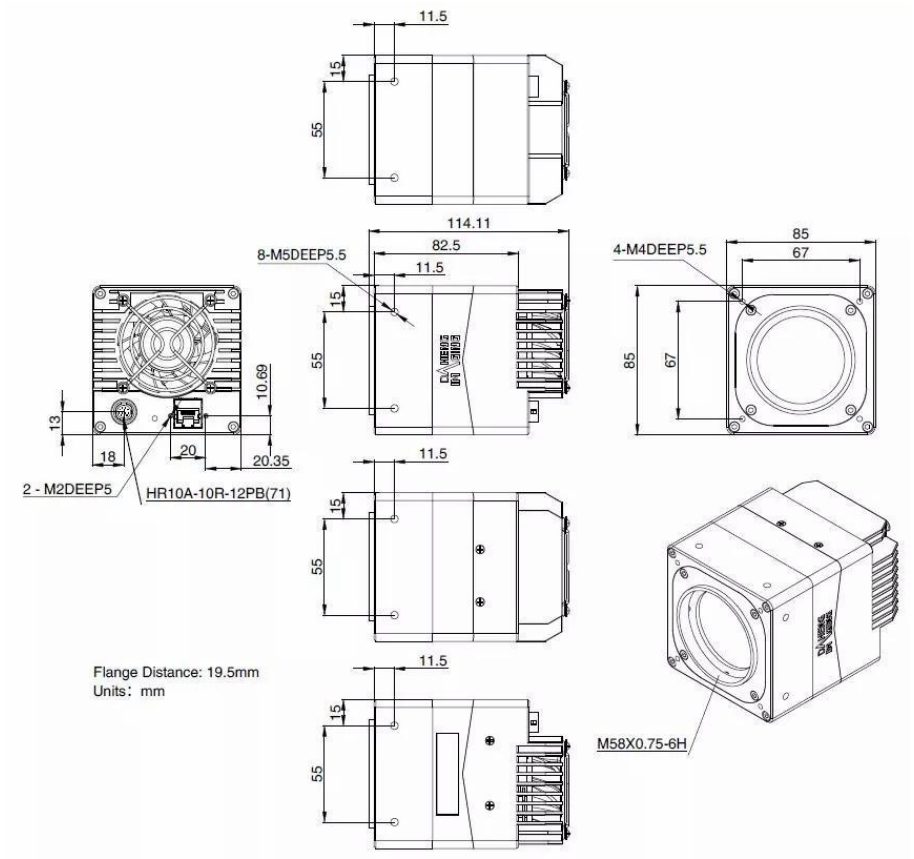

Figure 5-9 MARS-GT mechanical dimensions I

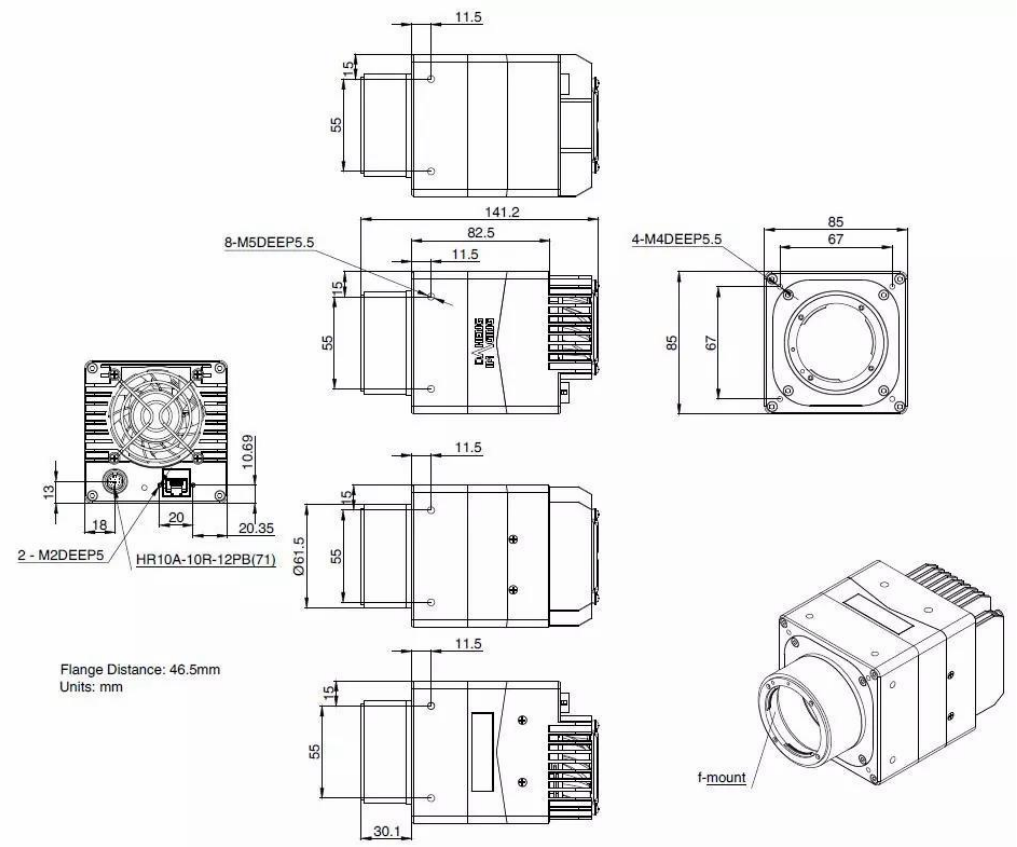

Figure 5-10 MARS-GT mechanical dimensions J

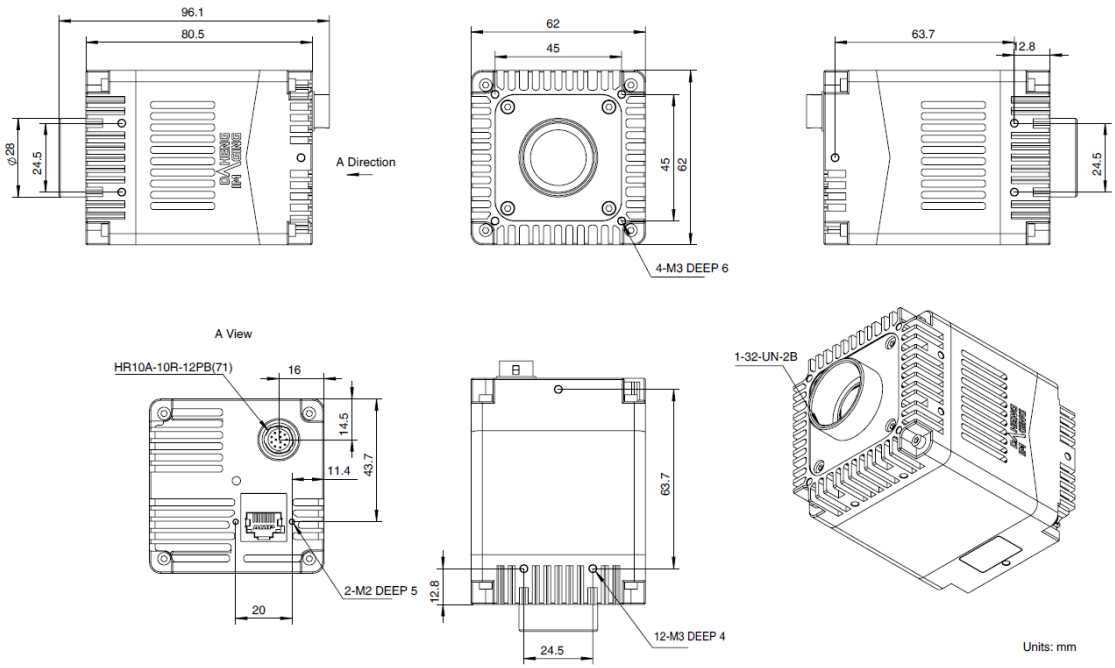

Figure 5-11 MARS-GT-SWIR mechanical dimensions K

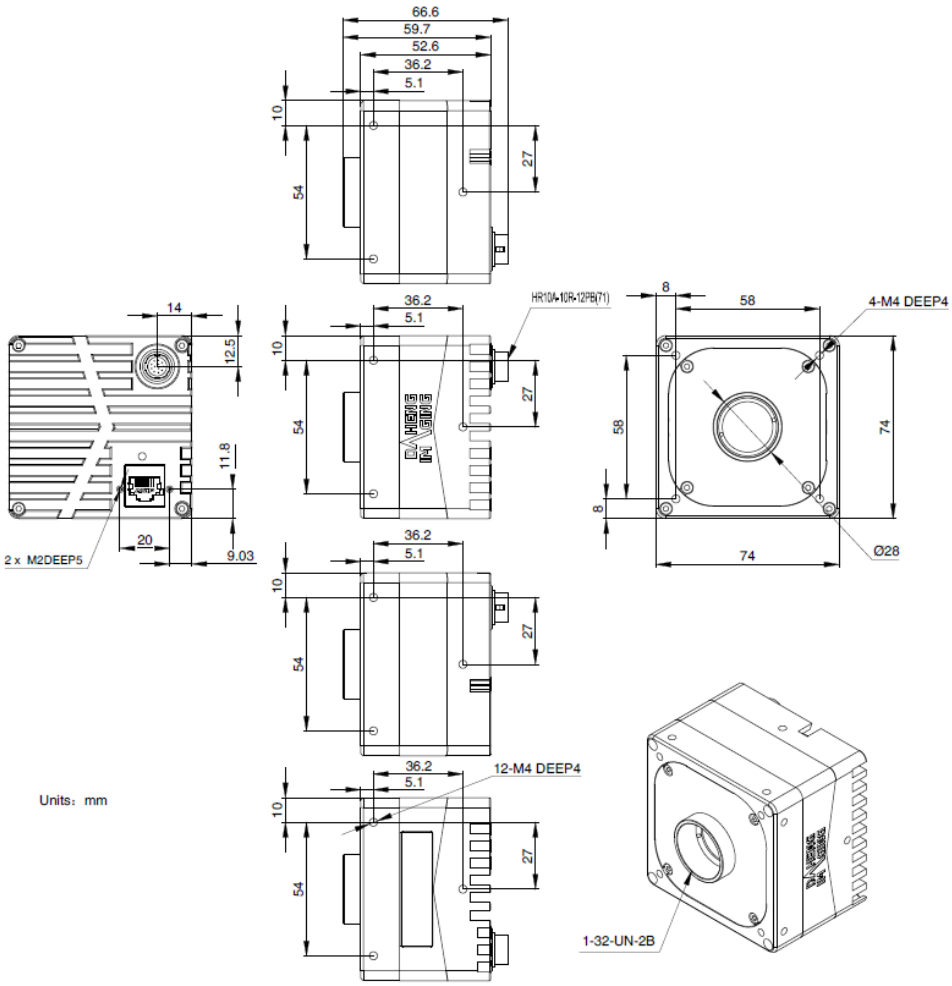

Figure 5-12 MARS-GT mechanical dimensions L

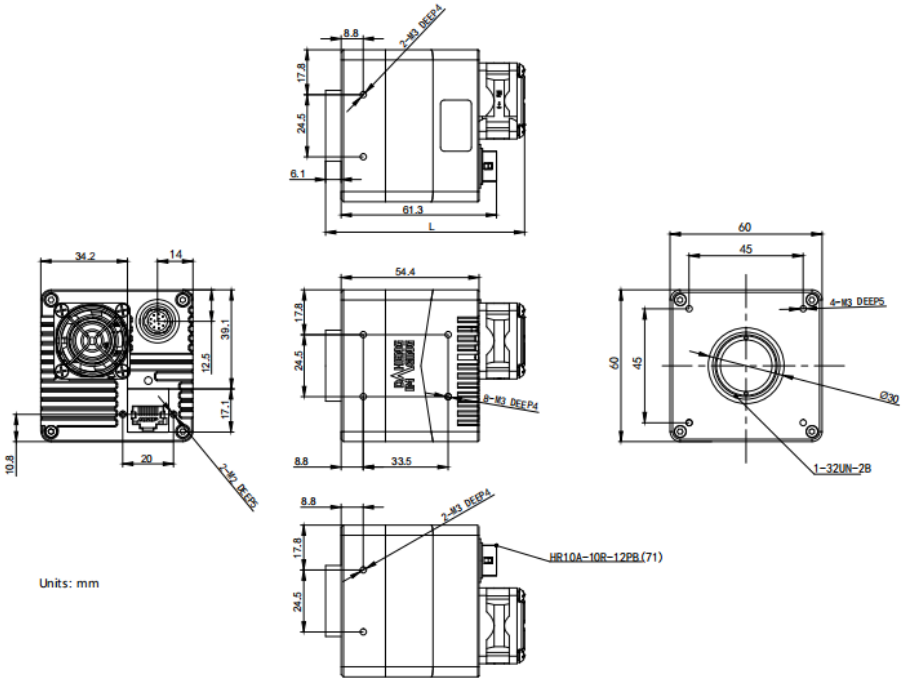

	MARS-561/900	MARS-1261	MARS-1840	MARS-2621/2622	MARS-1610/2020/2440
L	78.4	77.9	78.5	78.8	77.7

Figure 5-13 MARS-GT mechanical dimensions M

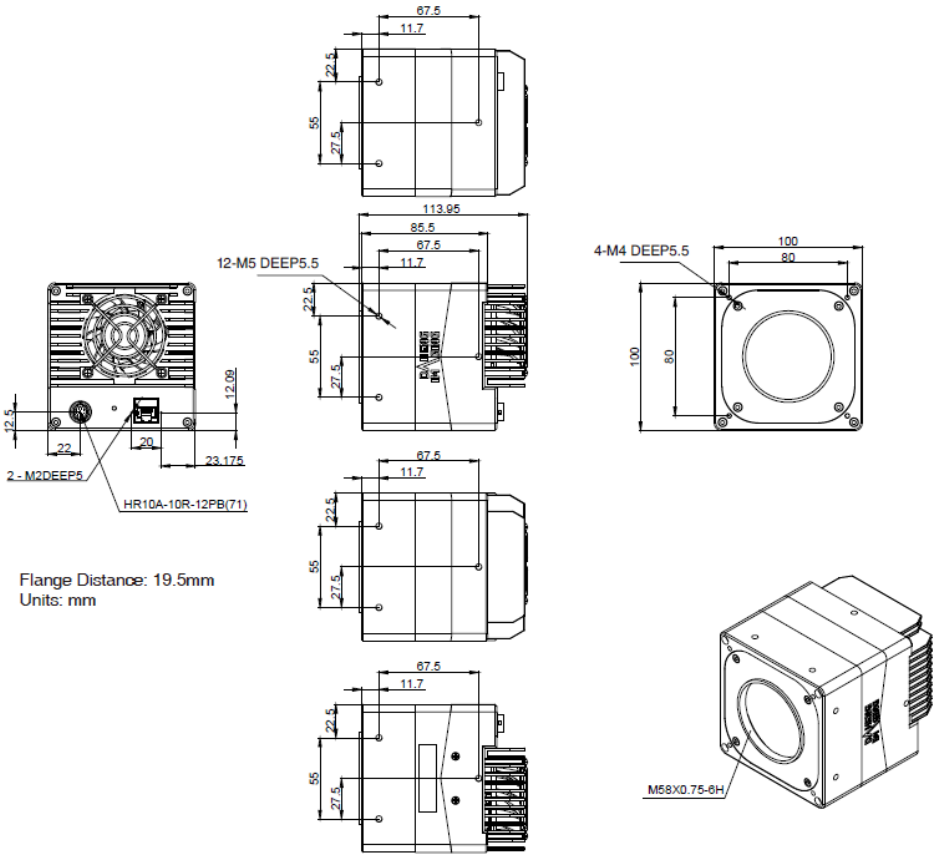

Figure 5-14 MARS-GT mechanical dimensions N

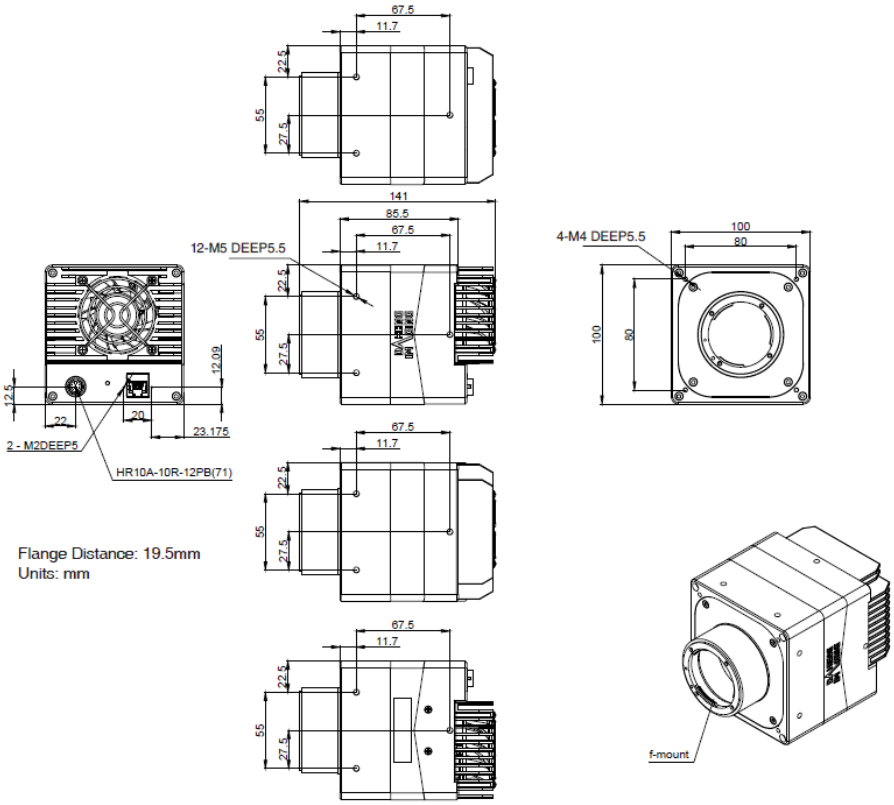

Figure 5-15 MARS-GT mechanical dimensions O

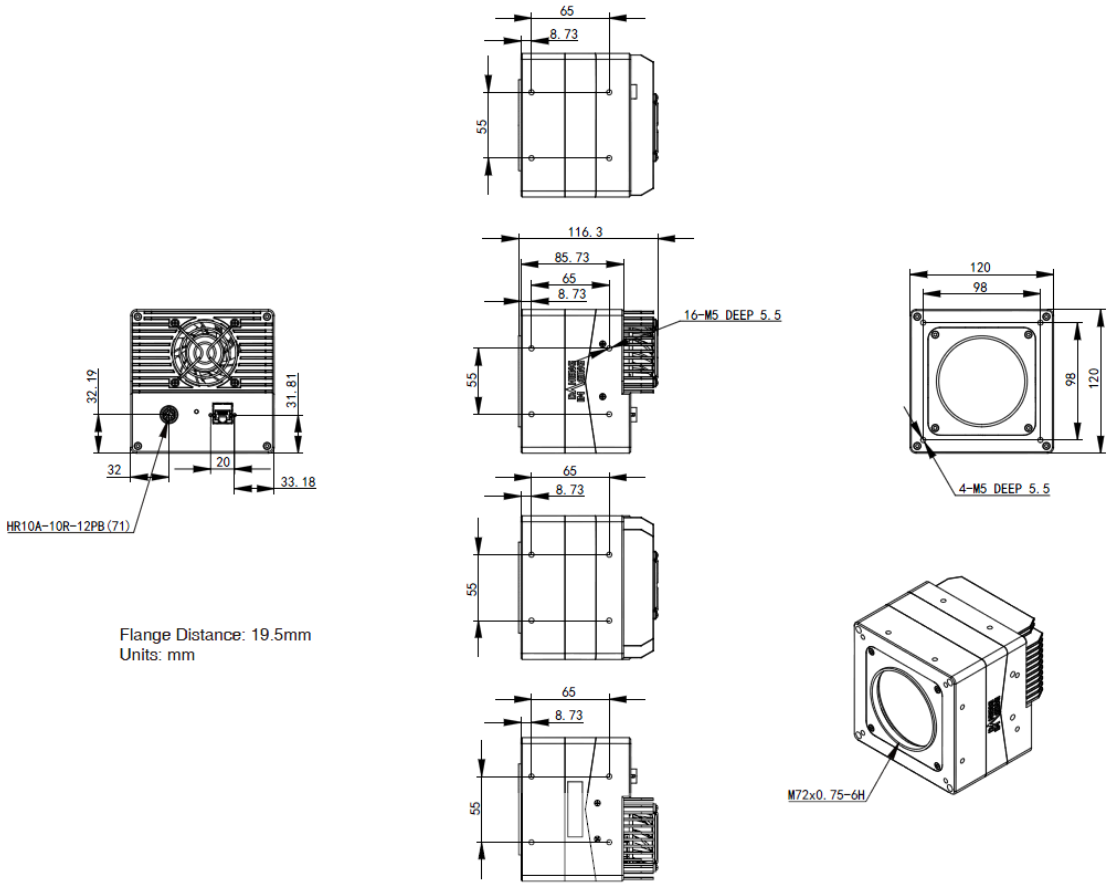

Figure 5-16 MARS-GT mechanical dimensions P

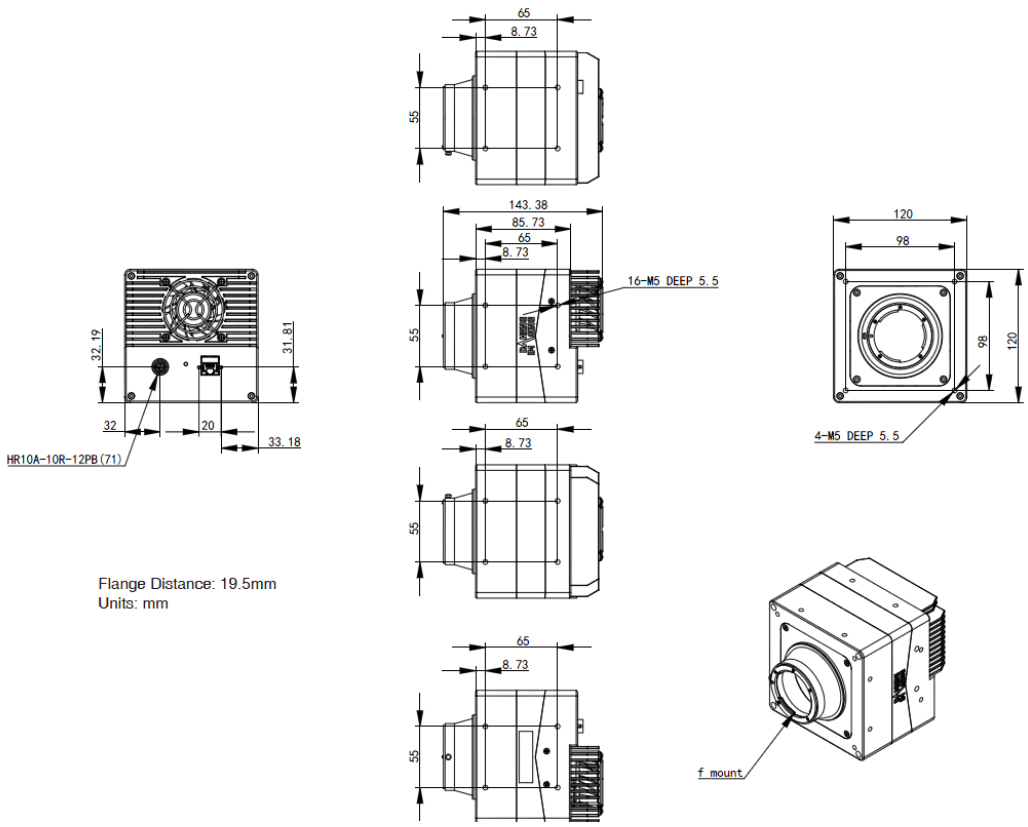

Figure 5-17 MARS-GT mechanical dimensions Q

5.2. Optical Interface

The distance of the lens installation reference plane to the sensor photosensitive surface, the acceptable lens thread length, and filter/substrate information are in the table below (if you need other lens interfaces, please contact sales or technical support for information). The cut-off frequency of the visible light filter of the color camera is 700nm, which reduces the impact of the invisible part on the image. The filter/substrate has an impact on the rear focus, and removing it may cause unclear focus. If it must be removed, please contact our technical support.

Models	Mount	Flange Distance (in the air)	Lens Thread Length	Filter/Substrate
MARS-321-176GTM-TN-SWIR MARS-533-134GTM-TN-SWIR MARS-533-170GTM-TN-SWIR	C	17.526mm	<11.1mm	-
MARS-170-662GTM/C \ MARS-280-409GTM/C MARS-561-207GTM/C(-NF) \ MARS-900-120GTM/C(-NF) MARS-1261-90GTM(-NF) \ MARS-1610-52GTM/C(-NF) MARS-1840-630GTM/C(-NF) \ MARS-2020-42GTM/C(-NF) MARS-2440-35GTM/C(-NF) \ MARS-2621-42GTM/C(-NF) MARS-2440-35GTM-NF-V MARS-2622-42GTM/C(-NF) \ MARS-2621-42GTM(-NF)-NIR MARS-2622-42GTM(-NF)-NIR \ MARS-2621-42GTM/C-S MARS-2622-42GTM/C-S \ MARS-2621-42GTM-NIR-S MARS-2622-42GTM-NIR-S	C	17.526mm	<11.1mm	C: Visible light filter M: Antireflective tablet

MARS-5000-24GTM/C(-NF) MARS-6500-18GTM/C(-NF) MARS-6501-18GTM/C(-NF)	M58-D1	11.48mm	<5mm	C: Visible light filter M: Glass substrate
	M58	19.5 mm	<11mm	
	F	46.5 mm	-	
MARS-5000-24GTM/C-TF MARS-6500/6501-18GTM/C-TF	M58	19.5 mm	<11mm	
	F	46.5 mm	-	
MARS-6100-18GTM/C-TF	M58	19.5 mm	<5mm	
	F	46.5 mm	-	
MARS-15100-6GTM/C-TF	M72	19.5 mm	< 5 mm	
	F	46.5 mm	-	

5.3. Tripod Adapter Dimensions

When customizing the tripod adapter, you need to consider the relationship between tripod adapter, screw length and step thickness of tripod adapter.

1) Screw length = tripod adapter step thickness + spring washer thickness + Screwing length of camera screw thread

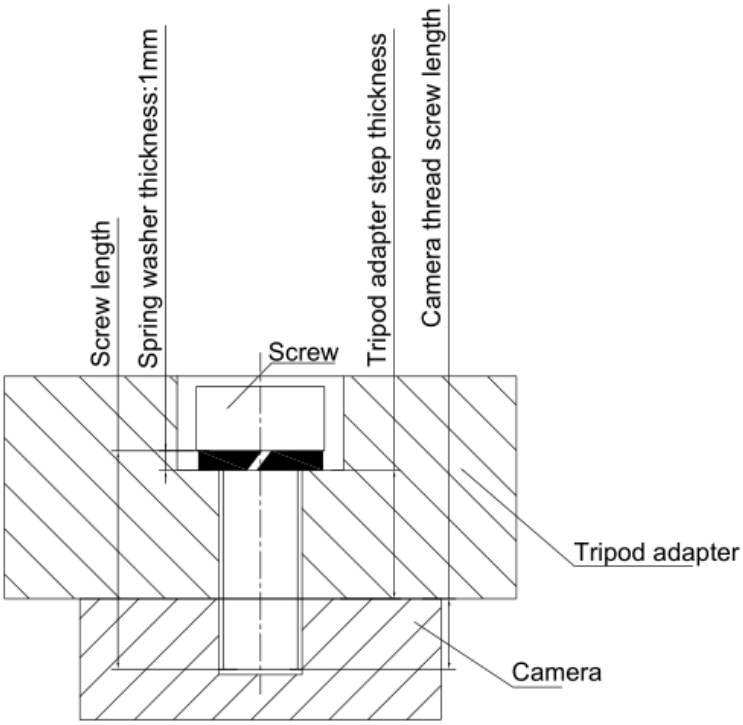

Figure 5-18 Schematic diagram of screw specification, tripod adapter step thickness and spring washer thickness

2) It is recommended that you select the screw specifications and the tripod adapter step thickness from the table below:

Camera dimensions of 60mm × 60mm × 54mm

Screw specification	Tripod adapter step thickness (mm)	Spring washer thickness (mm)	Screwing length of camera screw thread (mm)
M3*7 screw	2.5	1	3.5
M3*8 screw	3.5	1	3.5

Camera dimensions of 40mm × 70mm × 76.05mm

Screw specification	Tripod adapter step thickness (mm)	Spring washer thickness (mm)	Screwing length of camera screw thread (mm)
M3*8 screw	2.5	1	4.5
M3*10 screw	4.5	1	4.5

Camera dimensions of 74mm × 74mm × 59mm

Screw specification	Tripod adapter step thickness (mm)	Spring washer thickness (mm)	Screwing length of camera screw thread (mm)
M4*8 screw	3.5	1	3.5
M4*10 screw	5.5	1	3.5

Camera dimensions of 85mm × 85mm × 82.5mm, 100mm × 100mm × 114.4mm, 100mm × 100mm × 141.5mm, 120mm × 120mm × 116.3mm, 120mm × 120mm × 143.38mm

Screw specification (Hexagonal socket head cap screw)	Tripod adapter step thickness (mm)	Spring washer thickness (mm)	Screwing length of camera screw thread (mm)
M4*8 screw	2	1.1	4.9
M4*10 screw	4	1.1	4.9
M4*12 screw	6	1.1	4.9
M5*8 screw	2	1.3	4.7
M5*10 screw	4	1.3	4.7
M5*12 screw	6	1.3	4.7

© 2026 China Daheng Group, Inc. Beijing Image Vision Technology Branch

Camera dimensions of 62mm × 62mm × 80.5mm

Screw specification	Tripod adapter step thickness (mm)	Spring washer thickness (mm)	Screwing length of camera screw thread (mm)
The front of the front shell			
M3*7 screw	2.2	1	3.8
M3*8 screw	3.2	1	3.8
The side of the camera			
M3*8 screw	2.2	1	4.8
M3*10 screw	4.2	1	4.8

Camera dimensions of 74mm × 74mm × 52.6mm

Screw specification (Hexagonal socket head cap screw)	Tripod adapter step thickness (mm)	Spring washer thickness (mm)	Screwing length of camera screw thread (mm)
M4*8 screw	3.3	1.1	3.6
M4*10 screw	5.3	1.1	3.6

If the screw specification and the thickness of the tripod adapter do not conform to the requirement above, it may cause the camera thread hole through or thread stripping.

6. Filters and Lenses

6.1. Filters

The MARS color models are equipped with IR filters. The thickness of the filter is 0.7±0.05mm, and the cut-off frequency is 700nm, which reduces the influence of invisible light on the image. The monochrome models are equipped with transparent glasses. Remove IR-filters or transparent glasses will defocus the image plane.

Contact our technical support when the glass needed to be removed.

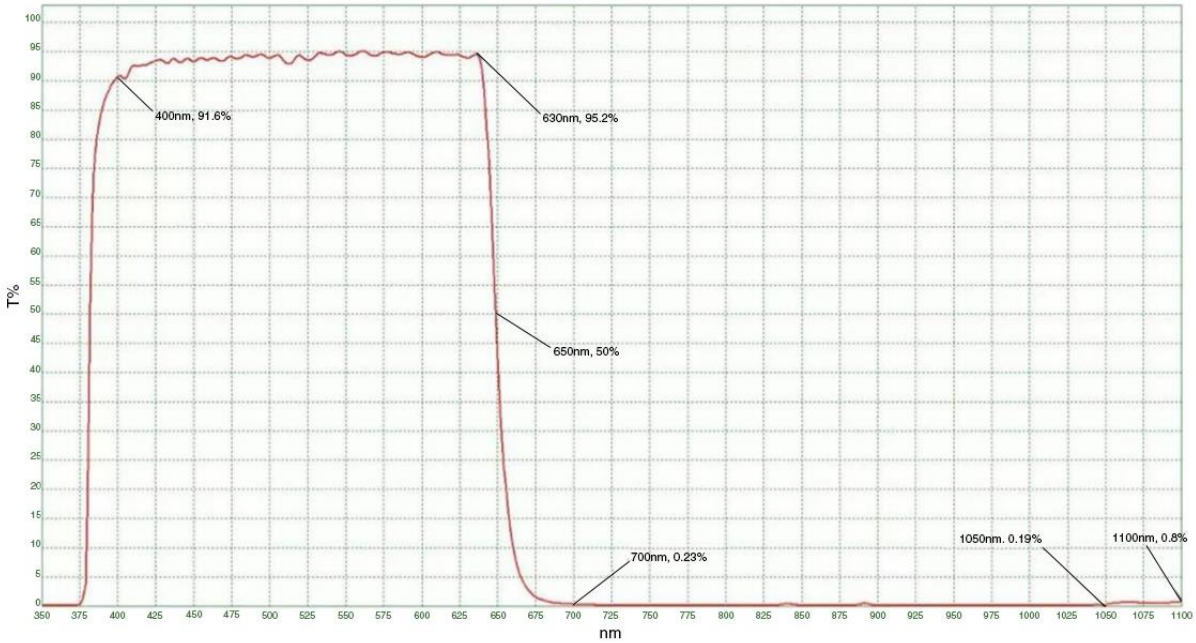

Figure 6-1 Infrared cut-off filter transmittance curve for MARS series color camera

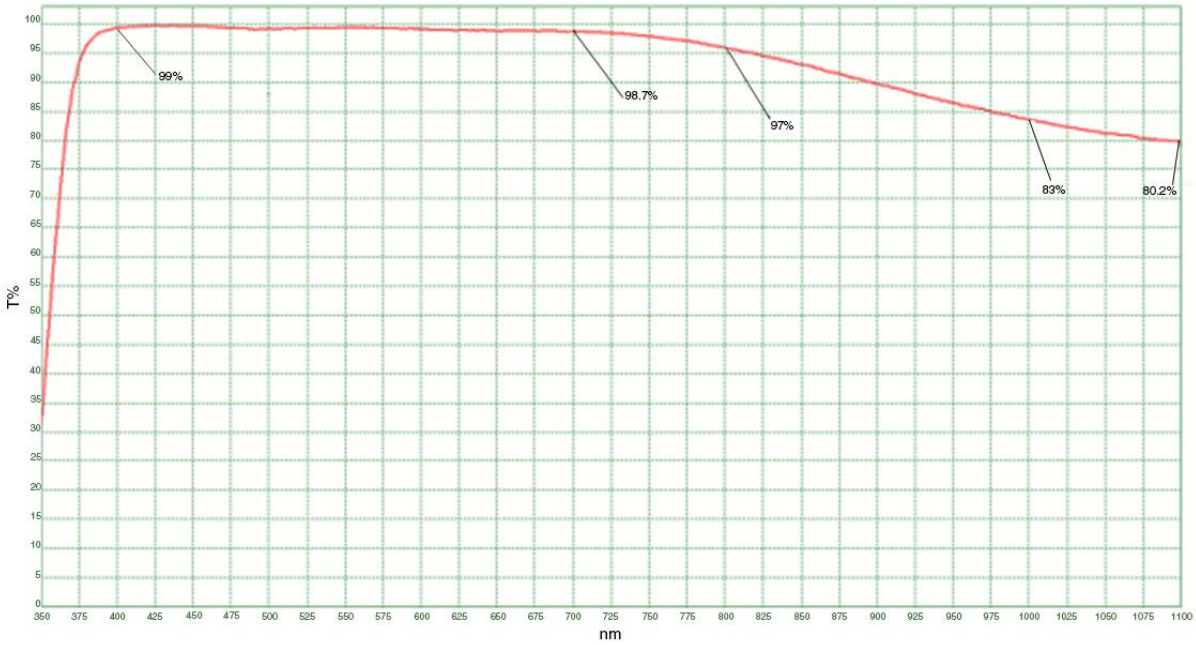

Figure 6-2 MARS series mono camera transmittance curve

7. Electrical Interface

7.1. LED Light

An LED light is set on the back cover of camera which indicates camera's status, as shown in Table 7-1. LED light can display 3 colors: red, yellow and green.

LED status	Camera status
Off	No power
Solid red	The camera is powered on, but the program does not start properly
Solid green	Ethernet is connected, but no data is being transmitted
Solid yellow	The camera starts properly, but the network connection is not established
Flashing yellow-green	The camera starts properly, but the network connection is not established, the other party's device is 10M/100M and other unsupported link speed levels
Flashing yellow	The camera's permanent IP address and other real-time save parameters are incorrect or the camera is started in the userset mode, the parameter set is wrong, and the camera is switched to the default mode to start. Use the IP Configurator to save the camera IP or re-save the userset. After the camera is powered on, the LED status returns to green
Flashing green	Data is being transmitted through Ethernet
Flashing red-green	Camera initialization failed

Table 7-1 Camera status

7.2. Ethernet Port

Ethernet connector is a standard RJ45 jack, and the pin definition follows the Ethernet standard.

Ethernet port supports CAT-6a cables or above, and the cable length can be up to 30m.

7.3. I/O Port

7.3.1. I/O Port Definition

I/O port is implemented by 12-pin Hirose connector (No. HR10A-10R-12PB(71)), and the corresponding plug is HR10A-10P-12S(73).

Diagram	Pin	Definition	Description
	1	Line0+	Opto-isolated input +
	2	GND	PWR GND & GPIO GND
	3	Line0-	Opto-isolated input -

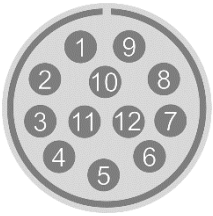	4	POWER_IN	Camera external power
	5	Line2	GPIO input/output
	6	RS232 Rx	RS232 serial port receiving*
	7	Line1-	Opto-isolated output -
	8	Line1+	Opto-isolated output +
	9	GND	PWR GND & GPIO GND
	10	GND	PWR GND & GPIO GND
	11	POWER_IN	Camera external power
	12	RS232 Tx	RS232 serial port sending*

Table 7-2 I/O port definition (back sight of camera)

The input power of the cameras must be 12V (-10%) ~ 24V (+10%) when powered by I/O port. +24VDC (± 10%) only for TF models.

*Available for some models.

1) The polarity of power cannot be reversed, otherwise, camera or other peripherals could burn out.

2) The polarity of GPIO pins cannot be reversed, otherwise, camera or other peripherals could burn out.

7.3.2. I/O Electrical Characteristics

7.3.2.1. Line0 (Opto-isolated Input) Circuit

Hardware schematics of opto-isolated input circuit is shown as Figure 7-1.

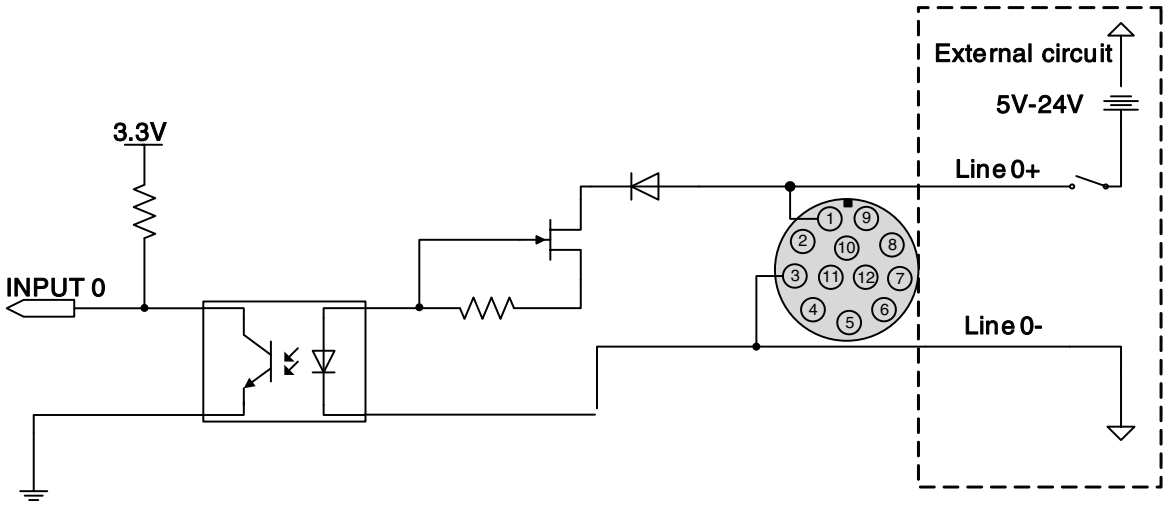

Figure 7-1 Opto-isolated input circuit

- Logic 0 input voltage: 0V~+2.5V (Line0+ voltage)

- Logic 1 input voltage: +5V~+24V (Line0+ voltage)
- Minimum input current: 7mA
- The status is unstable when input voltage is between 2.5V and 5V, which should be avoided
- When the external input voltage is 5V, there is no need for circuit-limiting resistance in the external input. But if there is a series resistance, please ensure the value is less than 90Ω. In order to protect the Line0+ while the external input voltage is higher than 9V, a circuit-limiting resistance is needed in the external input. The recommended resistance is shown in Table 7-3

External input voltage	Circuit-limiting resistance Rlimit	Line0+ input voltage
5V	Non or <90Ω	About 5V
9V	680Ω	About 5.5V
12V	1kΩ	About 6V
24V	2kΩ	About 10V

Table 7-3 Circuit-limiting resistor value

The connection method of the opto-isolated input circuit and the NPN and PNP photosensor is shown in Figure 7-2 and Figure 7-3. The relationship between the pull-up resistor value and the external power supply voltage is shown in Table 7-3.

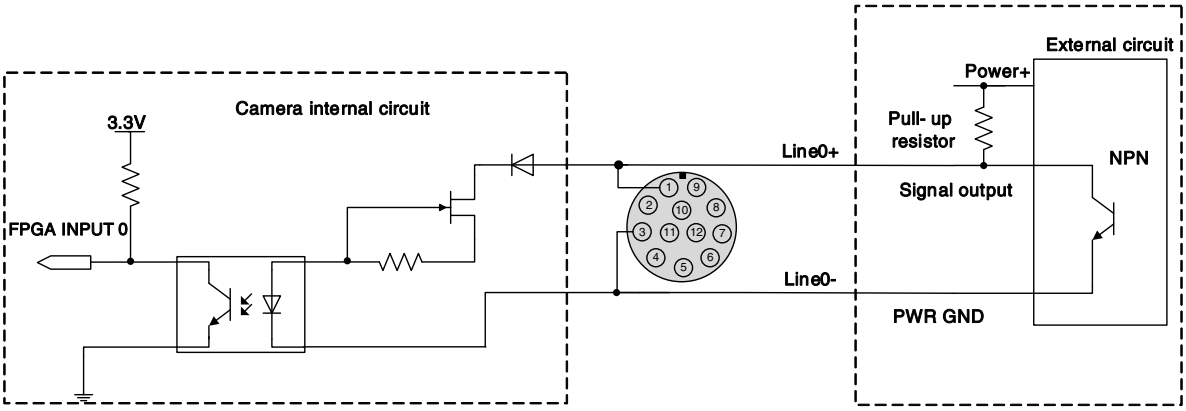

Figure 7-2 NPN photosensor connected to opto-isolated input circuit

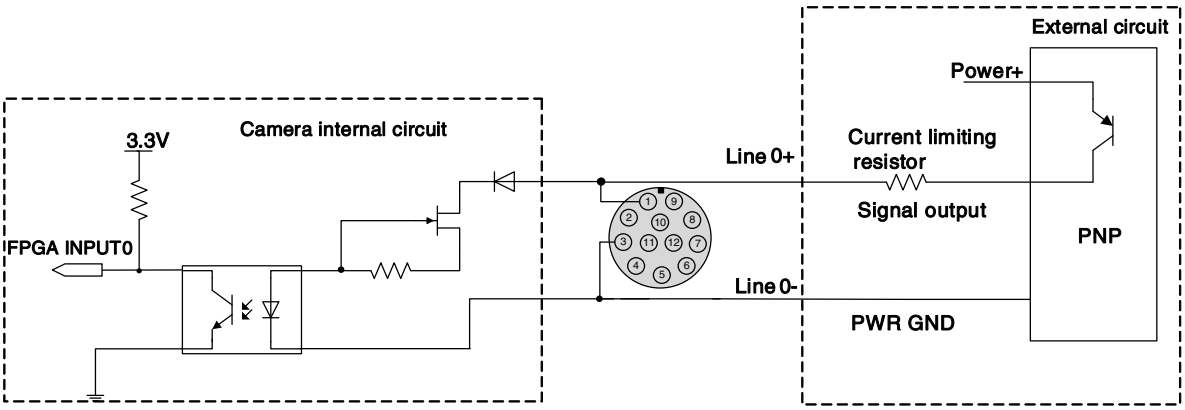

Figure 7-3 PNP photosensor connected to opto-isolated input circuit

- Total delay time of rising edge: <50μs (0°C~45°C), parameter description as shown in Figure 7-4
- Total delay time of falling edge: <50μs (0°C~45°C), parameter description as shown in Figure 7-4
- Different environment temperature and input voltage have influence on delay time of opto-isolated input circuit. Total delay time in typical application environment (temperature is 25°C) is as shown in Table 7-4

Parameter	Test condition	Value (μs)		
Rising edge delay	VIN=5V	3.02	~	6.96
	VIN=12V	2.46	~	5.14
Falling edge delay	VIN=5V	6.12	~	17.71
	VIN=12V	8.93	~	19.73

Table 7-4 Total delay time of opto-isolated input circuit in typical application environment

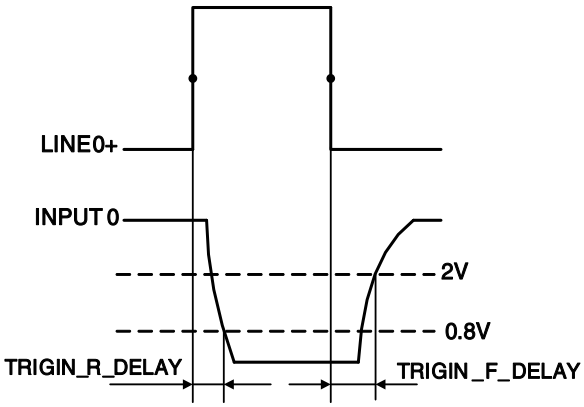

Figure 7-4 Parameter of opto-isolated input circuit

- Rising time delay (TRIGIN_R_DELAY): the response time from LINE0+ rises to 50% of amplitude to INPUT0 decreases to 0.8V
- Falling time delay (TRIGIN_F_DELAY): the response time from LINE0+ decreases to 50% of amplitude to INPUT0 rises to 2V

7.3.2.2. Line1 (Opto-isolated Output) Circuit

Hardware schematics of opto-isolated output circuit is shown as Figure 7-5.

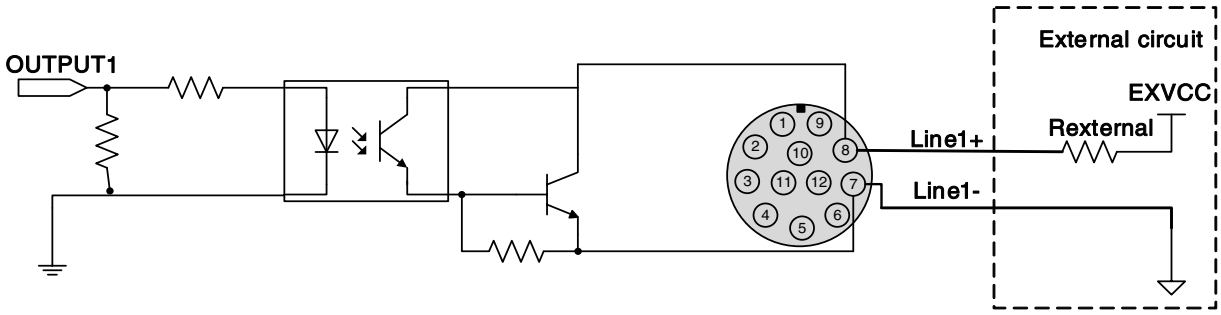

Figure 7-5 Opto-isolated output circuit

- Range of external voltage (EXVCC) is 5~24V
- Maximum output current of Line1 is 25mA
- Transistor voltage drop and output current of opto-isolated output circuit in typical application environment (temperature is 25°C) is as shown in Table 7-5

Test Conditions (Pull-up resistance of 1kΩ)	Transistor voltage drop (turn on, unit V)	Output current (mA)
External power supply of 5V	0.90	4.16
External power supply of 12V	0.97	11.11
External power supply of 24V	1.04	23.08

Table 7-5 Transistor voltage drop and output current of opto-isolated output circuit in typical application environment

- Rising time delay = td+tf: <50μs (0°C~45°C) (parameter description is shown in Figure 7-6)
- Falling time delay = ts+tr: <50μs (0°C~45°C) (parameter description is shown in Figure 7-6)
- Delay time in typical application conditions (environment temperature is 25°C) are shown in Table 7-6

Parameter	Test Condition	Value (μs)		
Storage time (ts)	External power is 5V, pull-up resistor is 1kΩ	6.16	~	13.26
Delay time (td)		1.90	~	3.16
Rising time (tr)		2.77	~	10.60
Falling time (tf)		7.60	~	11.12
Rising time delay = tf+td		4.70	~	13.76
Falling time delay = tr+ts		14.41	~	24.38

Table 7-6 Delay time of opto-isolated output circuit in typical application environment

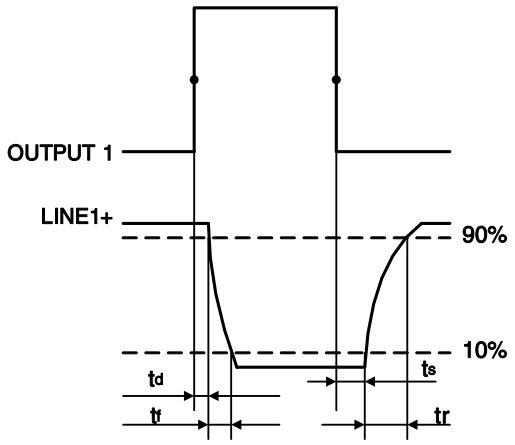

Figure 7-6 Parameter of opto-isolated output circuit

- Delay time (td): the response time from OUTPUT1 rises to 50% of amplitude to LINE1+ decreases to 90% of amplitude
- Falling time (tf): the response time for LINE1+ to decrease from 90% of the amplitude to 10%
- Storage time (ts): the response time from OUTPUT1 decreases to 50% of amplitude to LINE1+ rises to 10% of amplitude
- Rising time (tr): the response time for LINE1+ to rise from 10% of the amplitude to 90%

7.3.2.3. GPIO 2 (Bidirectional) Circuit

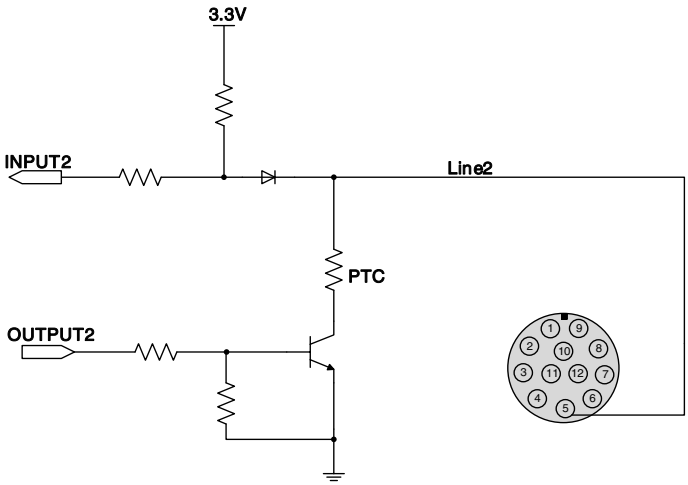

Figure 7-7 GPIO 2 (bidirectional) circuit

7.3.2.3.1. Line2 is Configured as Input

When Line2 is configured as input, the internal equivalent circuit of camera is shown in Figure 7-8, taking Line2 as an example:

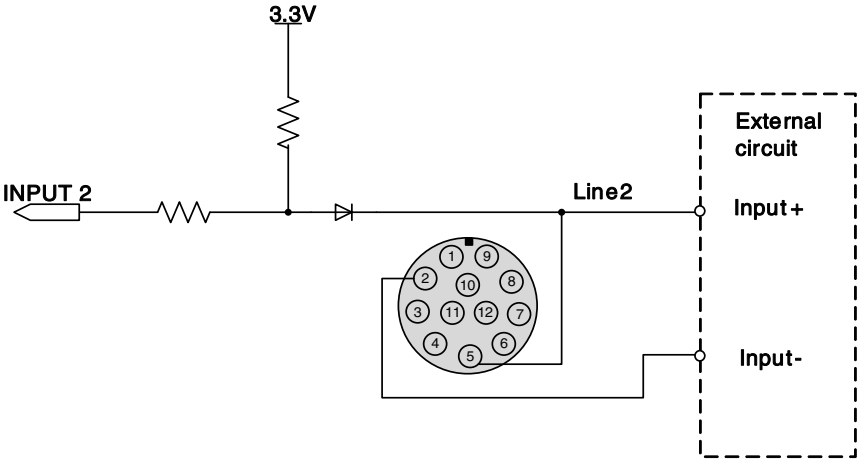

Figure 7-8 Internal equivalent circuit of camera when Line2 is configured as input

To avoid the damage of GPIO pins, please connect GND pin before supplying power to Line2.

1) Line2 input trigger electrical level standard (Except MARS-GT-S series)

- Logic 0 input voltage: 0V~+0.6V (Line2 voltage)
- Logic 1 input voltage: +1.9V~+24V (Line2 voltage)
- The status is unstable when input voltage is between 0.6V and 1.9V, which should be avoided
- When input of Line2 is high, input current is lower than 0.1mA. When input of Line2 is low, input current is lower than -1mA

2) Line2 input trigger electrical level standard (Only for MARS-GT-S series)

- Logic 0 input voltage: 0V~+0.7V (Line2 voltage)
- Logic 1 input voltage: +3.3V~+24V (Line2 voltage)
- The status is unstable when input voltage is between 0.7V and 3.3V, which should be avoided
- When input of Line2 is high, input current is lower than 0.1mA. When input of Line2 is low, input current is lower than -1mA

3) NPN and PNP connection method

When Line2 is configured as input. The connection method between them and NPN and PNP photoelectric sensors is shown in Figure 7-9 and Figure 7-10. The relationship between the pull-up resistor value and the external input voltage is shown in Table 7-3.

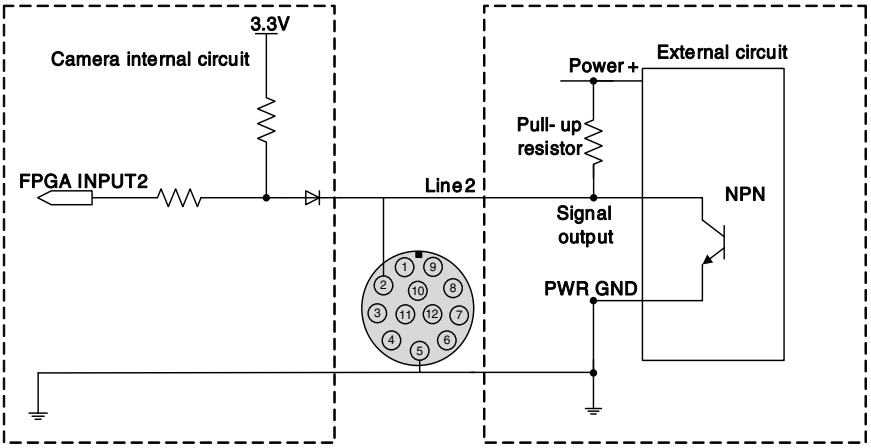

Figure 7-9 NPN photoelectric sensor connected to Line2 input circuit

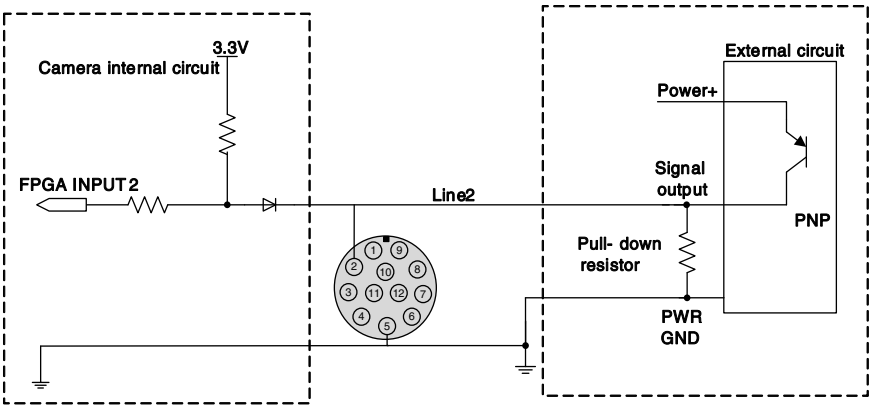

Figure 7-10 PNP photoelectric sensor connected to Line2 input circuit

When Line2 is configured as input, if the corresponding output device is common-anode connected, pull-down resistor over 1K should not be used, otherwise the input voltage of Line2 will be over 0.6V and logic 0 cannot be recognized stably.

- Input rising time delay: <2μs (0°C~45°C), parameter description as shown in Figure 7-4
- Input falling time delay: <2μs (0°C~45°C), parameter description as shown in Figure 7-4

7.3.2.3.2. Line2 is Configured as Output

- Range of external voltage (EXVCC) is 5~24V
- Maximum output current of Line2 is 25mA, output impedance is 40Ω

Transistor voltage drop and output current in typical application conditions (temperature is 25°C) are shown in Table 7-7.

External voltage EXVCC	External resistance Rexternal	Transistor voltage drop (turn on, unit V)	Output current (mA)
5V	1kΩ	0.19	4.8
12V		0.46	11.6
24V		0.92	23.1

Table 7-7 Transistor voltage drop and output current of Line2 in typical conditions

- Rising time delay = tf+td: <20μs (0°C~45°C) (parameter description as shown in Figure 7-6)
- Falling time delay = tr+ts: <20μs (0°C~45°C) (parameter description as shown in Figure 7-6)

Delay parameters are affected greatly by external voltage and external pull-up resistor, but little by temperature. Output circuit time parameters in typical application conditions (temperature is 25°C) are shown in Table 7-8.

Parameter	Test Conditions	Value (μs)		
Storage time (ts)	External power is 5V, pull-up resistor is 1kΩ	0.17	~	0.18
Delay time (td)		0.08	~	0.09
Rising time (tr)		0.11	~	0.16
Falling time (tf)		1.82	~	1.94
Rising time delay = tf+td		0.19	~	0.26
Falling time delay = tr+ts		1.97	~	2.09

Table 7-8 Circuit time parameters when GPIO is configured as output in typical conditions

© 2026 China Daheng Group, Inc. Beijing Image Vision Technology Branch

When Line2 is configured as output, the internal equivalent circuit of camera is shown in Figure 7-11, taking Line2 as an example.

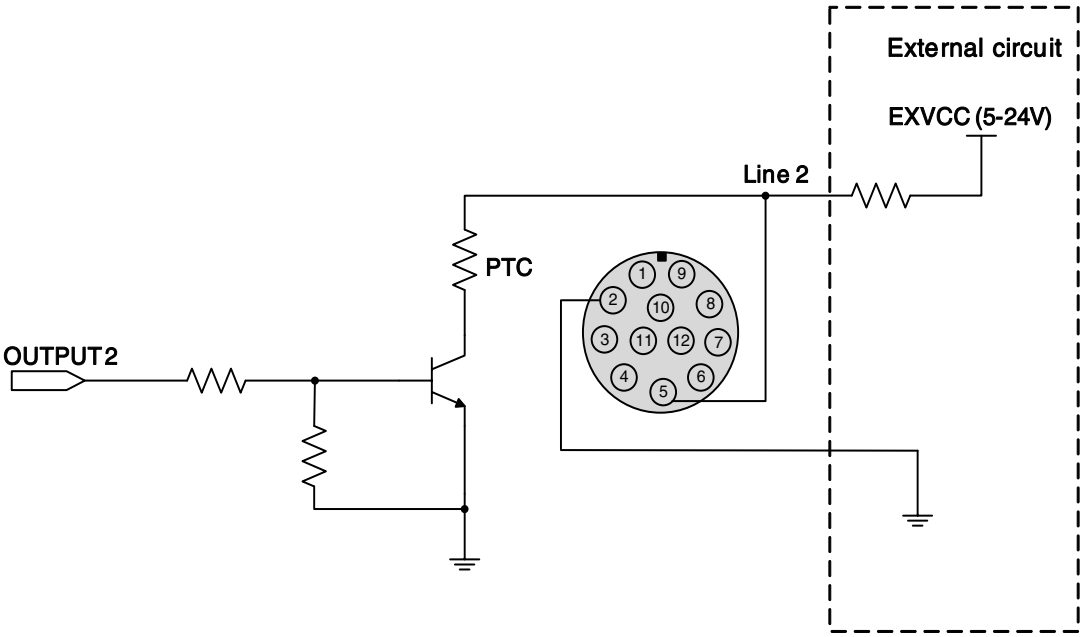

Figure 7-11 Internal equivalent circuit of camera when Line2 is configured as output

8. Features

8.1. I/O Control

8.1.1. Input Mode Operation

1) Configuring Line as input

The MARS 10GigE series camera has two input signals: Line0, Line2. In which the Line0 is uni-directional opto-isolated input, Line2 are bi-directional lines which can be configured as input or output.

The camera's default input is Line0 when the camera is powered on. Line2 is input by default, which can be configured to be input or output by LineMode.

2) Input Debouncer

In order to suppress the interference signals from hardware trigger, the cameras have the hardware trigger filtering feature, including rising edge filtering and falling edge filtering. The user can set the trigger filter feature by setting the " TriggerFilterRaisingEdge " and the " TriggerFilterFallingEdge ". The range of the trigger filter feature is [0, 5000] μs, step: 1μs.

Example 1: Setting the rising edge filter width to 1ms, the high level pulse width less than 1ms will be filtered out, as shown in Figure 8-1:

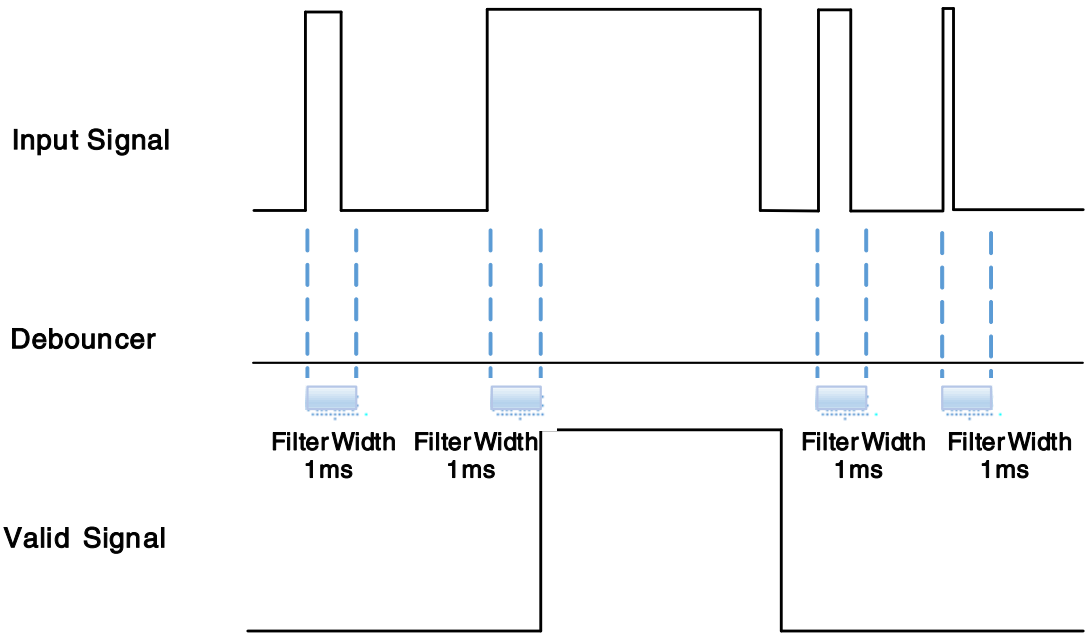

Figure 8-1 Input debouncer schematic diagram

3) Trigger Delay

The MARS 10GigE series camera has trigger delay feature. The user can set the trigger delay feature by setting "TriggerDelay". The range of the trigger delay feature is [0, 3000000] μs, step: 1μs.

Example 1: Setting the trigger delay value to 1000ms, and the trigger signal will be valid after 1000ms delay, as shown in Figure 8-2.

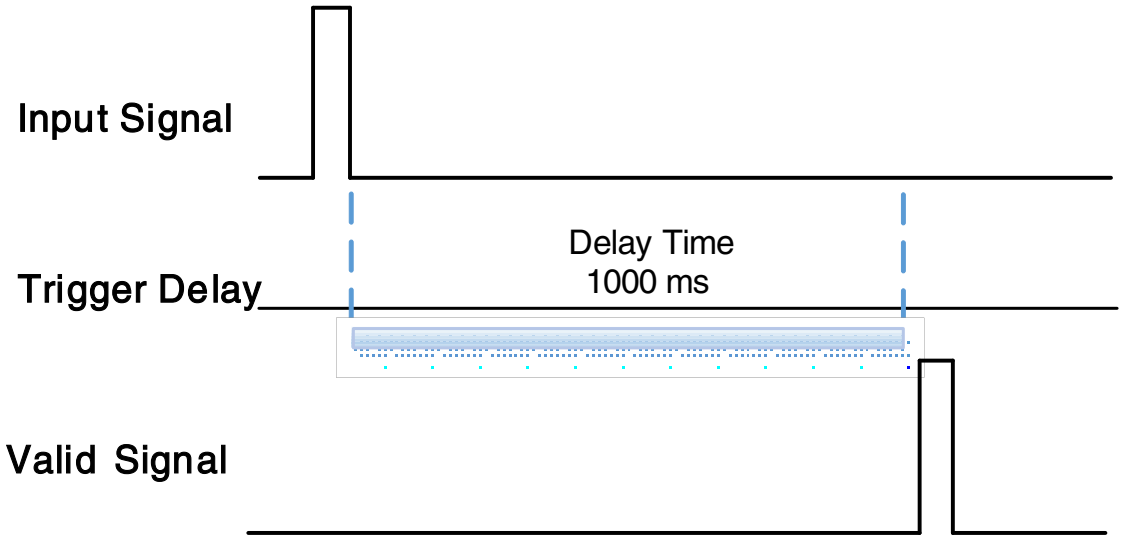

Figure 8-2 Trigger delay schematic diagram

4) Input Inverter

The signal level direction of input lines is configurable for thecameras. The user can select whether the input level is reverse or not by setting "LineInverter".

For the cameras, the default input line level is false when the camera is powered on, indicating that the input line level is not reversed. If it is set as true, indicating that the input line level is reversed. As shown in the Figure 8-3:

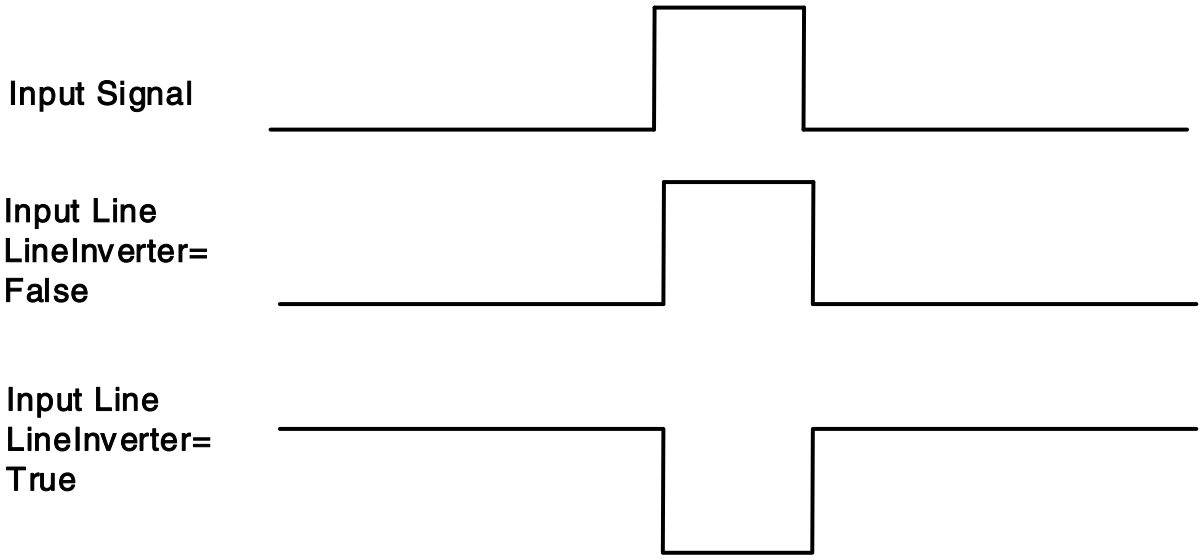

Figure 8-3 Setting input line reverse

8.1.2. Output Mode Operation

1) Configuring Line as output

The MARS 10GigE series camera has two output signals: Line1, Line2. In which the Line1 is a uni-directional opto-isolated output I/O, Line2 is bi-direction configurable I/Os.

The camera's default output is Line1 when the camera is powered on. Line2 can be configured to be output by changing the "LineMode" of this line.

Each output source of the two output lines can be configurable, and the output source includes: Strobe, UserOutput0, UserOutput1, UserOutput2, ExposureActive, FrameTriggerWait, AcquisitionTriggerWait.

The default output source of the camera is UserOutput0 when the camera is powered on.

What status (high or low level) of the output signal is valid depends on the specific external circuit. The following signal diagrams are described as examples of active low.

- Strobe

In this mode the camera sends Strobe Signal to activate the strobe light. The Strobe signal is active low. After receiving the trigger signal, the Strobe signal level is pulled low, and the pull-low time is the sum of the exposure delay time and the exposure time.

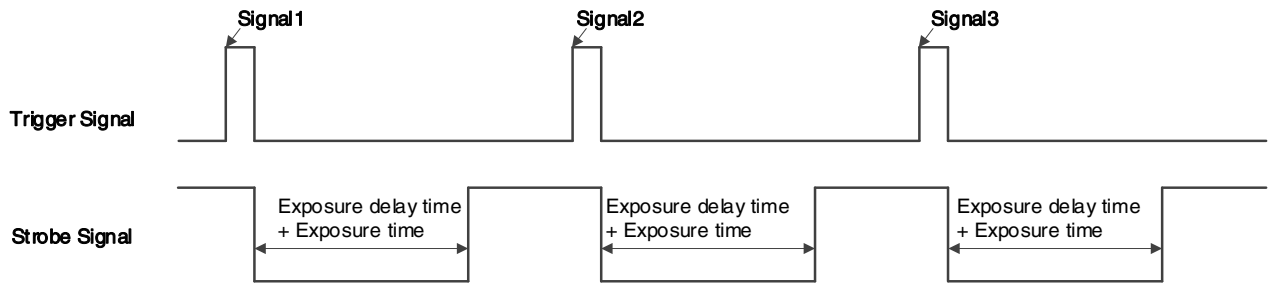

Figure 8-4 Strobe signal schematic diagram

- UserOutput

In this mode, the user can set the camera's constant output level for special processing, such as controlling the constant light source or the alarm light (two level types are available: high level or low level).

For example: select Line2 as the output line, the output source is selected as UserOutput1, and the output value is defined as true.

"LineSelector" is selected as "Line2", "LineMode" is set to "Output", "LineSource" is set to "UserOutput1", "UserOutputSelector" is selected as "UserOutput1", and "UserOutputValue" is set to "true".

- ExposureActive

You can use the "ExposureActive" signal to check whether the camera is currently exposing. The signal goes low at the beginning of the exposure and the signal goes high at the end of the exposure. For electronic rolling shutter cameras, the signal goes low when the exposure of the last line ends.

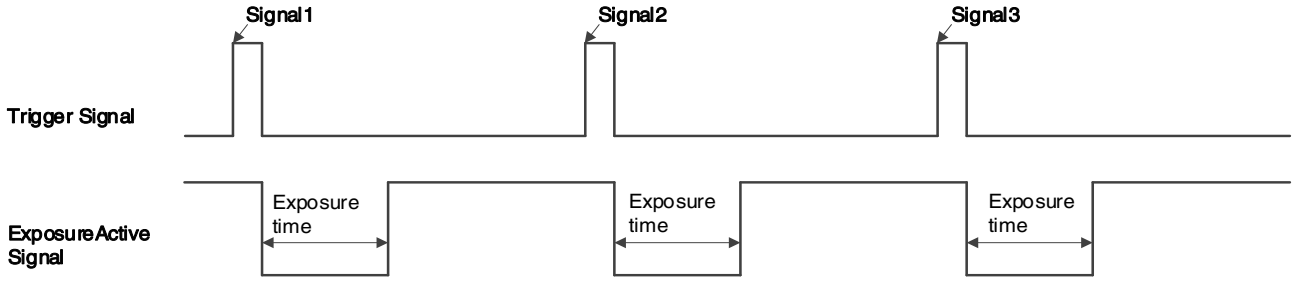

Figure 8-5 Global shutter "ExposureActive" signal schematic diagram

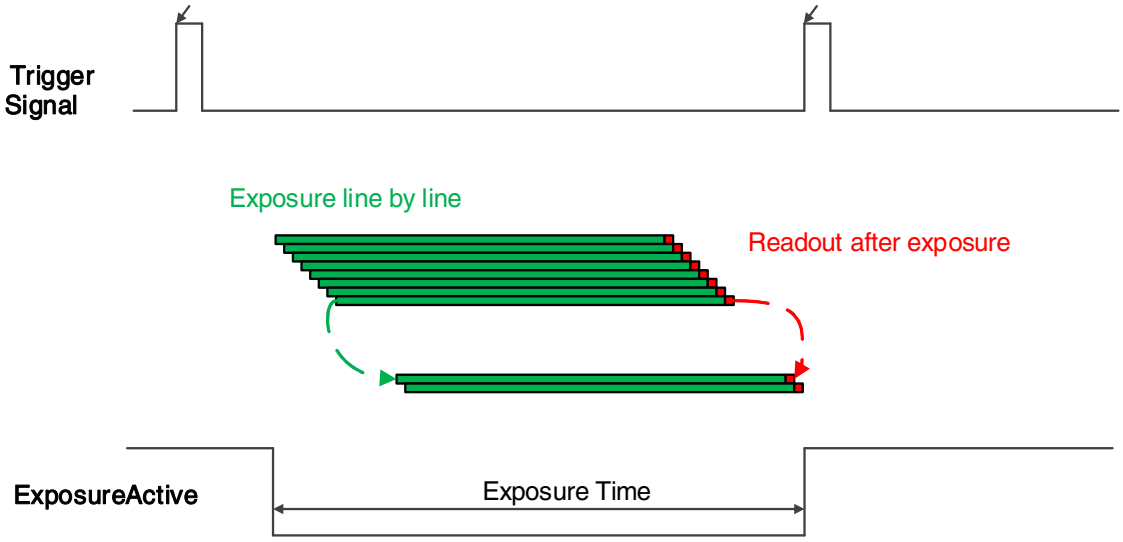

Figure 8-6 Electronic rolling shutter "ExposureActive" signal schematic diagram

This signal is also useful when the camera or target object is moving. For example, if a camera is installed on a robotic arm and moved to different positions for taking photos, monitoring the exposure activity signal can confirm whether the exposure has ended, thereby avoiding moving the camera during the exposure period.

- TriggerWait

The "TriggerWait" signal can be used to optimize the acquisition of the trigger image and to avoid excessive triggering.

It is recommended to use the "TriggerWait" signal only when the camera is configured for hardware trigger. For software trigger, please use the "AcquisitionStatus". When the camera is ready to receive a trigger signal of the corresponding trigger mode, the "TriggerWait" signal goes low. When the corresponding trigger signal is used, the "TriggerWait" signal goes high. It remains high until the camera is ready to receive the next trigger.

© 2026 China Daheng Group, Inc. Beijing Image Vision Technology Branch

When the trigger mode is "FrameStart", the camera acquires only one frame of image when it receives the trigger signal. After receiving the trigger signal, the "FrameTriggerWait" signal is pulled low and the camera starts exposure transmission. After the transfer is complete, the "FrameTriggerWait" signal is pulled high.

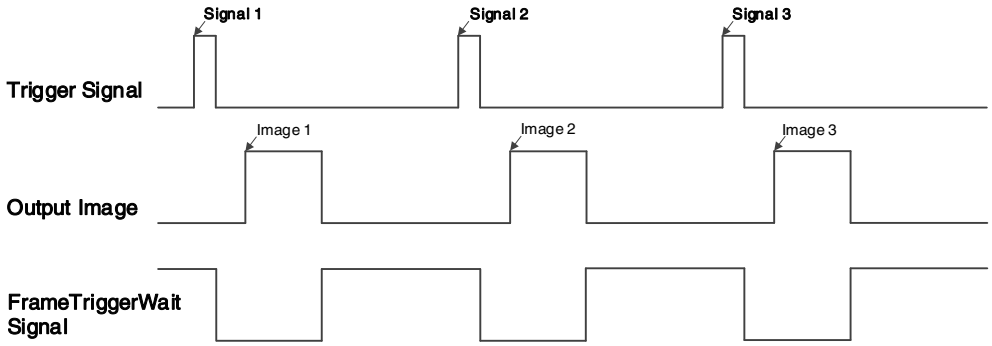

Figure 8-7 "FrameTriggerWait" signal schematic diagram

When the trigger mode is "FrameBurstStart", each time the camera receives a trigger signal, it will acquire multiple frames of image (the number of frames can be obtained by the function "AcquisitionBurstFrameCount"). After receiving the trigger signal, the "AcquisitionBurstTriggerWait" signal is pulled low and the camera starts the exposure transmission. When the transfer is completed, the "AcquisitionTriggerWait" signal will be pulled high.

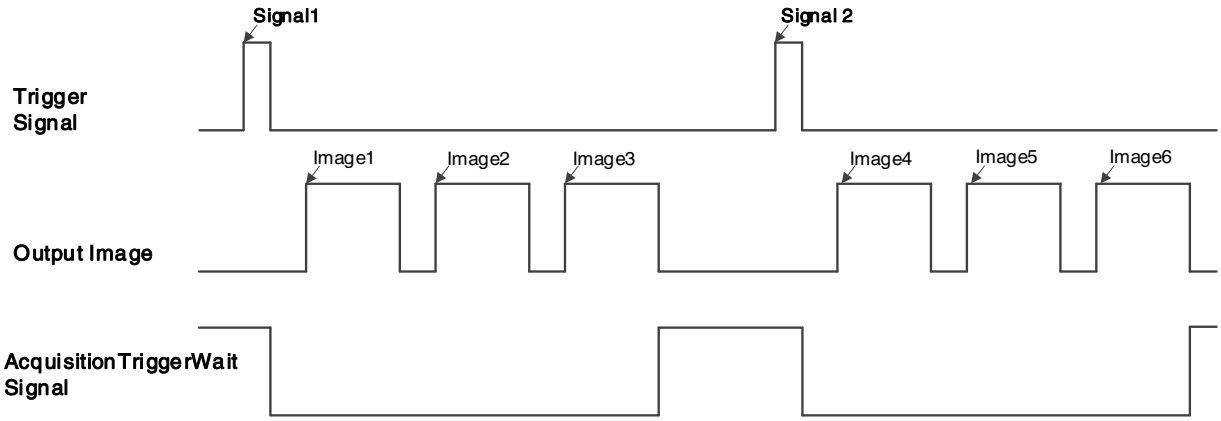

Figure 8-8 "AcquisitionTriggerWait" signal schematic diagram

2) Setting the user-defined status for the output lines

The cameras can select the user-defined output by setting "LineSource", by setting "UserOutputValue" to configure the output signal.

By setting "UserOutputSelector" to select UserOutput0, UserOutput1 or UserOutput2.

By setting "UserOutputValue" to set the user-defined output value, and the default value is false when the camera is powered on.

3) Output Inverter

In order to facilitate the camera I/O configuration and connection, the cameras have the function of configurable output signal level. The user can select whether the output level is reverse or not by setting "LineInverter".

The default output signal level is false when the camera is powered on, indicating that the output line level is not reversed. If it is set as true, indicating that the output line level is reversed. As shown in the Figure 8-9.

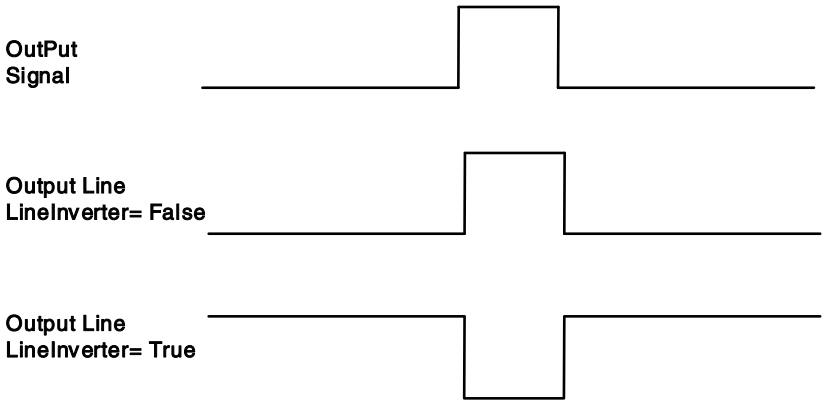

Figure 8-9 Set output line reversion

8.1.3. Read the LineStatus

1) Read the level of single line

The MARS 10GigE series camera can get the line's signal status.

A. MARS-GT-S models:

When the device is powered on, the default status of Line0 is False, the default status of Line1 is True, the default status of Line2 is False and Line2 is as Input.

B. Other models:

When the device is powered on, the default status of Line0 is False, the default status of Line1 is True, the default status of Line2 is True and Line2 is as Input.

2) Read all the lines level

The cameras can get the current status of all lines, which including two aspects: On the one hand, the signal status is the status of the external I/O after the reversal of the polarity. On the other hand, signal status level can reflect the external I/O level.

All the lines level status bit of the cameras are shown as follows:

A. For MARS-GT-S models, the default value is 0x2

Reserve	Line2	Line1	Line0
x	0	1	0

B. Other models: the default value is 0x6

Reserve	Line2	Line1	Line0
x	1	1	0

8.2. Image Acquisition Control

8.2.1. Acquisition Start and Stop

8.2.1.1. Acquisition Start

It can send **Acquisition Start** command immediately after opening the camera. The acquisition process in continuous mode is illustrated in Figure 8-10, and the acquisition process in trigger mode is illustrated in Figure 8-11.

- **Continuous Acquisition**

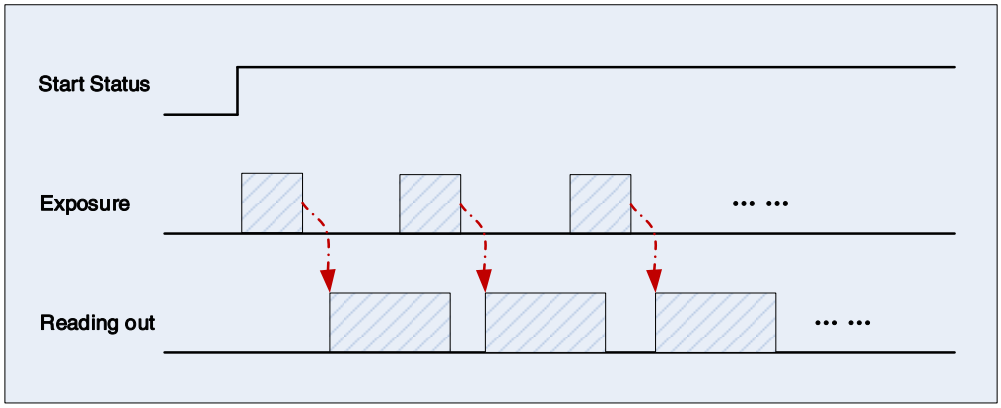

Figure 8-10 Continuous acquisition process

In continuous mode, a camera starts to expose and read out after receiving the **AcquisitionStart** command. The frame rate is determined by the exposure time, ROI and some other parameters.

- **Trigger Acquisition**

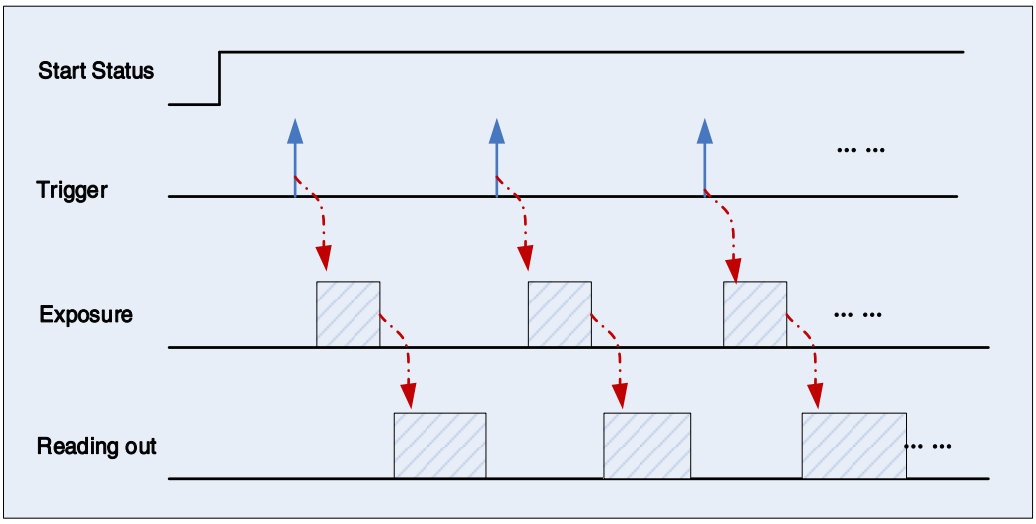

Figure 8-11 Trigger acquisition process

In trigger mode, sending **AcquisitionStart** command is not enough, a trigger signal is also needed. Each time a frame trigger is applied (including software trigger and hardware trigger), the camera will acquire and transmit a frame of image.

8.2.1.2. Acquisition Stop

It can send **AcquisitionStop** command to camera at any time. The acquisition stop process is irrelevant to acquisition mode. But different stop time will result in different process, as shown in Figure 8-12 and Figure 8-13.

- **Acquisition stop during reading out**

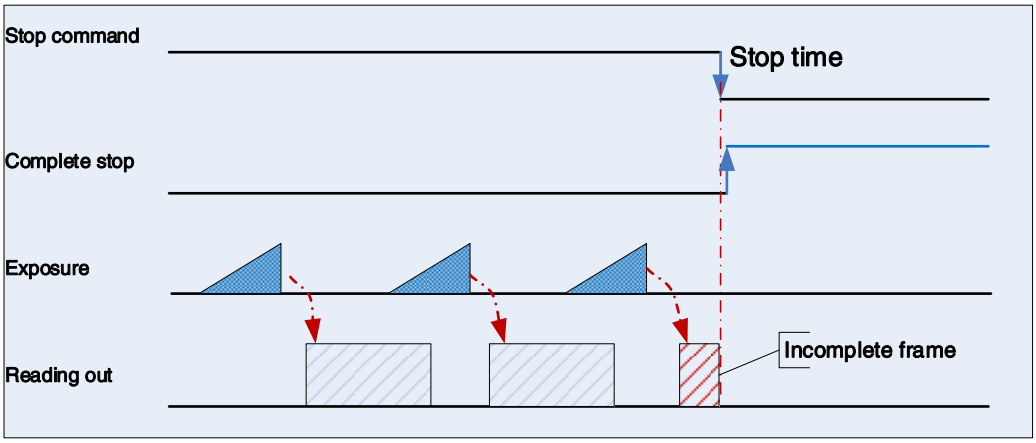

Figure 8-12 Acquisition stop during reading out

As shown in Figure 8-12, when the camera receives an acquisition stop command during reading out, it stops transferring frame data immediately. The currently transferred frame data is regarded as incomplete frame and will be discarded.

- **Acquisition stop during blanking**

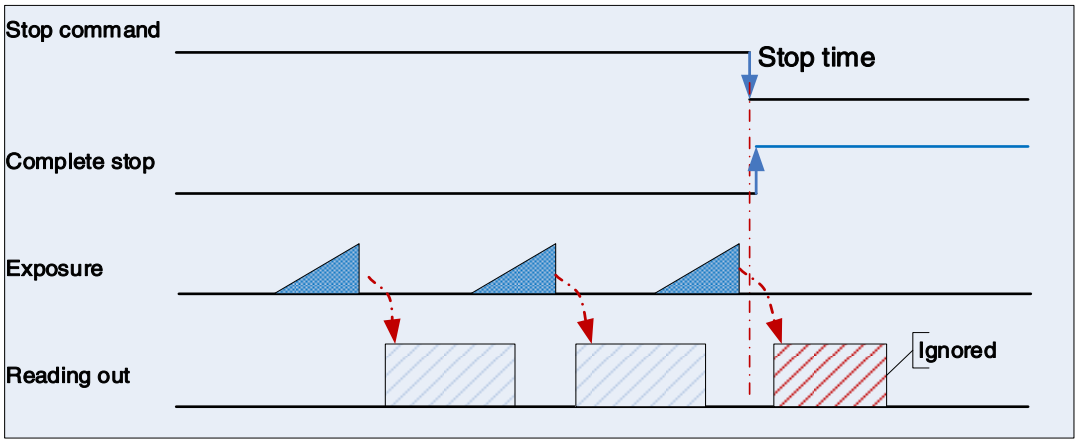

Figure 8-13 Acquisition stop during blanking

After the camera transferred a whole frame, the camera goes into wait state. When user sends an **AcquisitionStop** command in wait state, the camera will return to stop acquisition state. The camera will not send any frames even if it is just going to start the next exposing.

8.2.2. Acquisition Mode

Two camera acquisition modes are available: single frame acquisition mode and continuous acquisition mode.

- Single frame acquisition mode: In single frame acquisition mode, the camera will only acquire one frame of image at a time

1) When the trigger mode is set to On, the trigger type is arbitrary

After executing the **AcquisitionStart** command, the camera waits for a trigger signal, which may be a software trigger or an hardware trigger of the camera. When the camera receives the trigger signal and acquires an image, the camera will automatically stop image acquisition. If you want to acquire another frame of image, you must execute the **AcquisitionStart** command again.

2) When the trigger mode is set to Off

After executing the **AcquisitionStart** command, the camera acquires one frame of image and then automatically stops image acquisition. If you want to acquire another frame of image, you must execute the **AcquisitionStart** command again.

In single frame acquisition mode, you must execute the **AcquisitionStop** command to set the functions that cannot be set in the acquisition status, such as ROI, package size, etc.

- Continuous acquisition mode: In continuous acquisition mode, the camera continuously acquires and transmits images until the acquisition is stopped

1) When the trigger mode is set to On, the trigger type is **FrameStart**

After executing the **AcquisitionStart** command, the camera waits for a trigger signal, which may be a software trigger or an hardware trigger of the camera. Each time the camera receives a trigger signal, it can acquire a frame of image until the **AcquisitionStop** command is executed. It is not necessary to execute the **AcquisitionStart** command every time.

2) When the trigger mode is set to On, the trigger type is **FrameBurstStart**

After executing the **AcquisitionStart** command, the camera waits for a trigger signal, which may be a software trigger or a hardware trigger of the camera. Each time the camera receives a trigger signal, it can continuously acquire the set **AcquisitionFrameCount** frames of image. If the **AcquisitionStop** command is received during the acquisition process, the image being transmitted may be interrupted, resulting in the number of images acquired this time not reaching the **AcquisitionFrameCount** frames of image.

3) When the trigger mode is set to Off:

After executing the **AcquisitionStart** command, the camera will continuously acquire images until it receives the **AcquisitionStop** command.

You can check if the camera is in the waiting trigger status by the camera's trigger wait signal or by using the acquisition status function.

8.2.3. Trigger Type Selection

Two camera trigger types are available: **FrameStart** and **FrameBurstStart**. Different trigger types correspond to their respective set of trigger configurations, including trigger mode, trigger delay, trigger source, trigger polarity, and software trigger commands.

- FrameStart trigger mode

The **FrameStart** trigger is used to acquire one image. Each time the camera receives a **FrameStart** trigger signal, the camera begins to acquire an image.

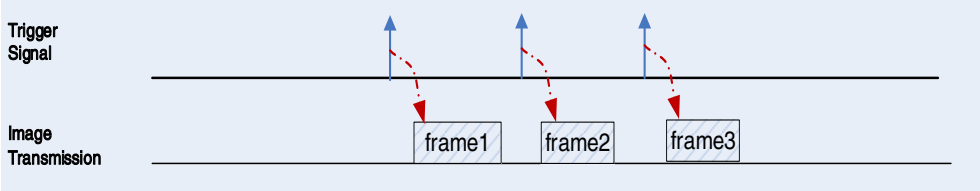

Figure 8-14 FrameStart trigger

- FrameBurstStart trigger mode

You can use the frame burst trigger to acquire a series of images ("continuous shooting" of the image). Each time the camera receives a **FrameBurstStart** trigger signal, the camera will start acquiring a series of images. The number of acquired image frames is specified by the "Acquisition burst frame count" parameter. The range of "Acquisition burst frame count" is 1~255, and the default value is 1.

For example, if the "Acquisition burst frame count" parameter is set to 3, the camera automatically acquires 3 images. Then, the camera waits for the next **FrameBurstStart** trigger signal. After receiving the next trigger signal, the camera will take another 3 images, and so on.

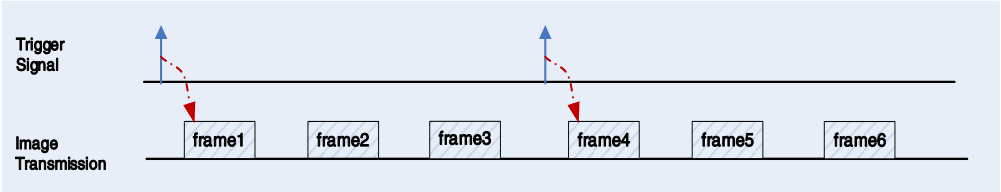

Figure 8-15 FrameBurstStart trigger

- **FrameStart** trigger mode and **FrameBurstStart** trigger mode set to ON at the same time

The **FrameStart** trigger mode and **FrameBurstStart** trigger mode can be set to ON at the same time. The camera will not acquire images immediately after receiving a **FrameStart/FrameBurstStart** trigger signal. The camera will wait for several **FrameStart** trigger signals after receiving the **FrameBurstStart** trigger signal and acquires images under the control of the **FrameStart** trigger signal. The number of acquired image frames is specified by the "Acquisition burst frame count" parameter.

For example, if the "Acquisition burst frame count" parameter is set to 3, after receive the **FrameBurstStart** trigger signal, the camera will wait for 3 **FrameStart** trigger signals and acquires 3 images. The remaining **FrameStart** trigger signals will be discarded, and so on.

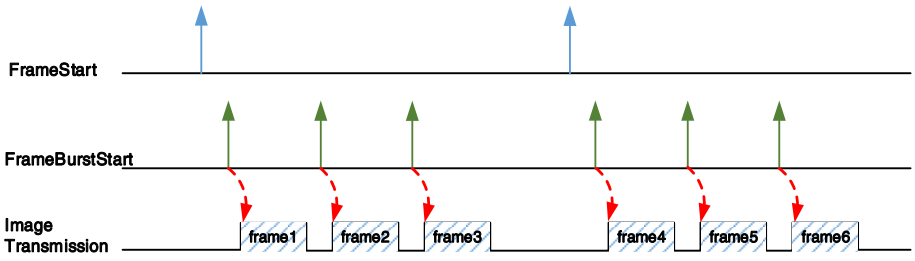

Figure 8-16 FrameStart trigger and FrameBurstStart trigger

8.2.4. Switching Trigger Mode

During the stream acquisition process, users can switch the trigger mode of the camera without the **AcquisitionStop** command.

As shown below, switching the trigger mode at different positions will have different results.

- **Switch trigger mode during frame reading out**

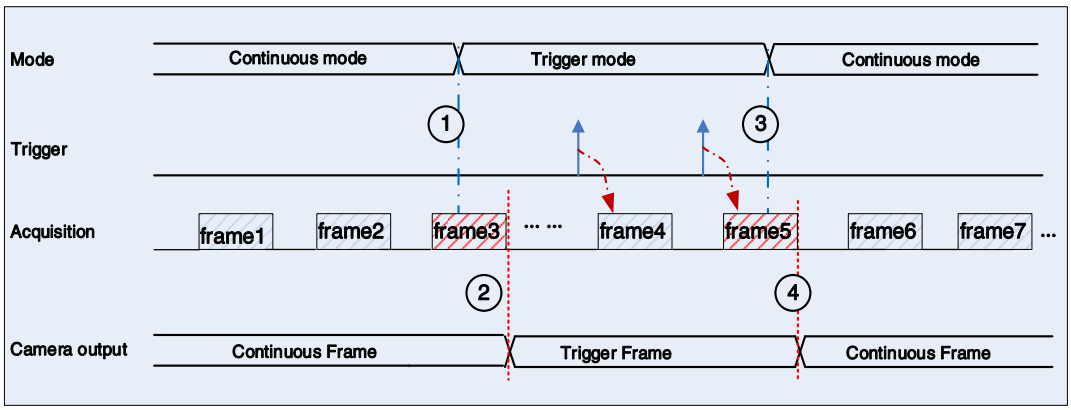

Figure 8-17 Switch trigger mode during frame reading out

As shown in Figure 8-17, the camera starts with trigger mode **OFF** after receiving acquisition start command.

At point 1, the camera gets a command of setting trigger mode **ON** while transferring the 3rd frame in trigger mode **OFF**. The trigger mode is not active until the 3rd frame is finished, at point 2, and then the trigger signal will be accepted. At point 3, the camera gets a command of switching back to **OFF**. It is also not active until the 5th frame is finished, it should wait a complete reading out. The camera switches from trigger mode to continuous mode at point 4, and then the camera works in continuous mode.

- **Switch trigger mode during blanking (or exposure)**

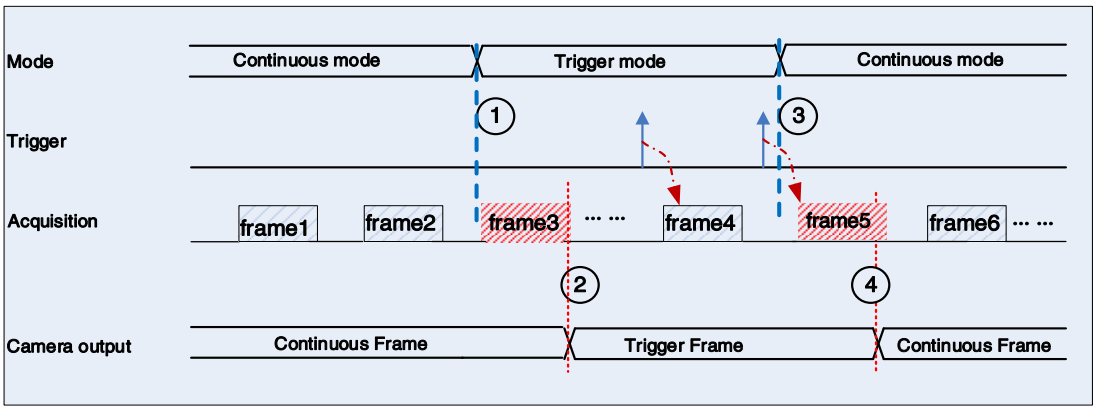

Figure 8-18 Switch trigger mode during blanking (or exposure)

As shown in Figure 8-18, the camera with trigger mode **OFF** begins after receiving an **AcquisitionStart** command.

At point 1, the camera gets a command of setting trigger mode **ON** while it is in wait state. The trigger mode is not active until the 3rd frame is finished (including exposure and reading out), i.e., point 2. Please

note that the 3rd frame does not belong to trigger mode. All trigger frames need trigger signals or soft-trigger commands. At point 3, the camera gets a command of switching back to continuous mode. It is also not active until the 5th frame is finished, it should wait a complete frame. The camera switches from trigger mode to continuous mode at point 4, and then the camera works in continuous mode.

8.2.5. Continuous Mode and Configuration

- **Continuous mode configuration**

The default value of **Trigger Mode** is **OFF** in default user set. If the camera is opened with default user set, the camera works in continuous mode directly. Otherwise, user can set **Trigger Mode OFF** to use continuous mode.

Other parameters also can be changed in **Trigger Mode OFF**.

- **Continuous mode features**

In continuous acquisition mode, the camera acquires and transfers images according to camera parameter set.

In continuous mode, ROI size, packet delay may have effects on frame rate.

8.2.6. Software Trigger Acquisition and Configuration

- **Software trigger acquisition configuration**

The camera supports software trigger acquisition mode. Three steps followed should be ensured.

1) Set the Trigger Mode to ON.

2) Set the Trigger Source to Software.

3) Send Software Trigger command.

All the software trigger commands are sent by the host through the 10Gigabit Ethernet bus, to trigger the camera to capture and transmission images.

- **Software trigger acquisition features**

In software trigger acquisition mode, the camera begins to acquire one image after receiving software trigger commands. In general, the number of frames is equal to the number of software trigger commands. The relative features are illustrated below:

1) In software trigger acquisition mode, if the trigger frequency is lower than permissible maximal FPS (Frame per Second) of the camera, the current frame rate is trigger frequency. If the trigger frequency is higher than permissible maximal FPS (Frame per Second) of the camera, some software triggers are ignored and the current frame rate is lower than trigger frequency.

2) The trigger delay feature can control the camera delay interval between your triggers and the camera acquiring frames. The default value of trigger delay time is zero.

8.2.7. Hardware Trigger Acquisition and Configuration

- **Hardware trigger acquisition configuration**

The camera supports hardware trigger acquisition mode. Three steps followed should be ensured:

1) Set the Trigger Mode to ON.

2) Set the Trigger Source to Line0, Line2.

3) Connect hardware trigger signal to Line0.

If the Trigger Source is set by Line2, it should be ensured that the corresponding Line is set as Input.

Please refer to section 8.1.1 for more information of the programmable GPIO interfaces.

- **Hardware trigger acquisition features**

The relative features about the camera's trigger signal process are illustrated below:

1) The polarity of lines can be set to inverted or not inverted, and the default setting is not inverted.

2) Trigger filter: whether to execute filter operation for the input hardware trigger signal. This camera can support separate setting of raising edge filter and falling edge filter. The default configuration is not use trigger filter.

3) Trigger delay: whether to generate image frame after trigger delay operation for the hardware trigger signal that cameras received. The default configuration is not.

The features, like trigger polarity, trigger delay and trigger filter, can be select in the GalaxyView.

The camera's trigger source Line0 use opto-isolated circuit to isolate signal. Its internal circuit delay trigger signal and rising edge's delay time is less than falling edge's. There are a dozen clock cycles delay of rising edge and dozens clock cycles delay of falling edge. If you use Line0 to trigger the camera, the positive pulse signal's positive width will be wider (about 20-40μs) and the negative pulse signal's negative width will be narrower (about 20-40μs). You can adjust filter parameter to accurately filter trigger signal.

8.2.8. MultiSource Trigger and Configuration

- **MultiSource Configuration**

The MARS 10GigE series camera can support multi source trigger to acquire images, if you want to use this function in the program, you have to make the TriggerMode as ON in the AcquisitionControl option, select MultiSource in TriggerSource, at the same time, select the corresponding source Line0, Line2 and Software one by one in the MultiSourceSelector, then make the MultiSourceEnable selection as True or False to decide whether this trigger source is multi source or not.

For example, when your settings are as follows: MultiSourceSelector=Line0, MultiSourceEnable=True, MultiSourceSelector=Line2, MultiSourceEnable=True, MultiSourceSelector=Software, MultiSourceEnable=False.

That means you've set both Line0 and Line2 as trigger source and the PC will process these two signal simultaneously, which is different from the normal trigger mode that only one trigger source can be processed.

MultiSource function can be use in normal way as well when users just set one trigger source's MultiSourceEnable as True. For example, when in MultiSource mode, set MultiSourceSelector=Line0, MultiSourceEnable=True, other MultiSourceEnable as False, that equals to set Line0 as trigger source directly.

Besides, when external trigger source is in need, users have to complete the physical connection of the external trigger in IO according to the MultiSourceEnable settings.

- **MultiSource Features**

MARS 10GigE series camera features about dealing with the multi-source input signal:

1) TriggerActivation, choose RisingEdge or FallingEdge manually.

2) TriggerFilter, whether to filter the hardware trigger signal (Filter function is not available for software trigger). The cameras support RisingEdge and FallingEdge two modes and the default configuration is no TriggerFilter operation. TriggerFilter will cause trigger delay.

3) TriggerDelay, whether to postpone the multi-source signals and generate images. The default configuration is no TriggerDelay operation.

4) Because of the exogenous bi-directional I/O Line2, when you reverse pins' status as Output, then the corresponding trigger source under MultiSource cannot be enabled.

5) There is no limit for TriggerSelector, which is means that you can choose MultiSource selection both in FrameStart and in FrameBurstStart. Different trigger configurations can be selected for MultiSources of different types, including trigger mode, trigger source, etc.

6) You can get frame information in MultiSource mode, the chunk id is 4 and the length is 4 byte. Trigger source of the current transferring image is as follow:

0	1	2	3
Software trigger	Hardware trigger Line0	Hardware trigger Line2	Reserve

Table 8-1 Frame information status

8.2.9. TriggerCache

- **Trigger cache usage configuration**

The cameras support TriggerCache function, which can be set only in valid acquisition and hardware trigger mode. All signal buffer will be cleared while in AcquisitionStop mode.

Firstly, set the TriggerMode as On. Choose one as TriggerSource from Line0, Line2, Software or MultiSource (see details in 8.2.8), then set TriggerCacheEnable as true, and the trigger signals of the current trigger source will be buffered, and the number of the signals is consistent with the frame memory depth. These cached trigger signals will stimulate the sensor and transmit the image data to the user

through the back-end.

For FrameStart and FrameBurstStart mode, there are two ways to buffer the trigger source separately.

- **TriggerDelay**

TriggerDelay is also abled in TriggerCache mode. The signals will be cached if there is a new signal coming to the corresponding line during the TriggerDelay process and the cache capacity is better than TriggerCache function.

- **TriggerShield event**

When the trigger frequency is too high, the trigger buffer depth will be exceeded, which will cause TriggerShield event and then signal lost.

- **AcquisitionFrameRate**

The cached trigger signals will be output one by one, only when an effective trigger waiting signal is detected. Generally the cached trigger signals will trigger the sensor according to the sensor read limit frame cycle. However, when the frame rate control is effective, and the frame rate limit period is greater than the sensor read limit frame period, the cached trigger signal will trigger the sensor according to the frame rate limit frame period.

8.2.10. Overlap Exposure and Non-overlap Exposure

There are two stages in image acquisition of the cameras: exposure and readout. Once the camera is triggered, it begins to integrate and when the integration is over, the image data will be read out immediately.

The cameras support two exposure modes: overlap exposure and non-overlap exposure. The user cannot assign the overlap exposure or non-overlap exposure directly, it depends on the frequency of trigger signal and the exposure time. The two exposure mode are described as below.

- **Non-overlap exposure**

In non-overlap exposure mode, after the exposure and readout of the current frame are completed, then the next frame will expose and read out. As shown in the Figure 8-19, the Nth frame is read out, after a period of time, the $N+1^{th}$ frame to be exposed.

The formula of non-overlap exposure frame period:

non-overlap exposure frame period > exposure time + readout time

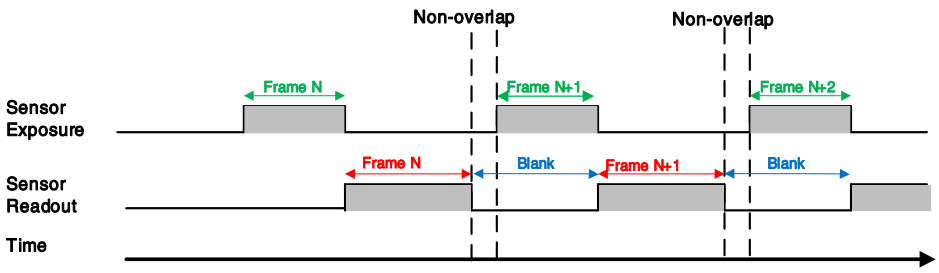

Figure 8-19 The exposure sequence diagram in non-overlap exposure mode

If the interval between two triggers is greater than the sum of the exposure time and readout time, it will not occur overlap exposure, as shown in Figure 8-20.

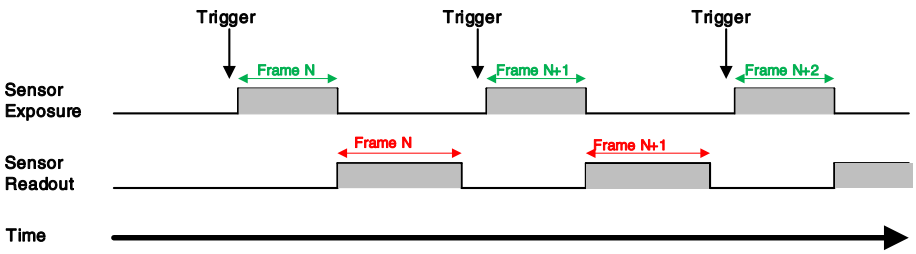

Figure 8-20 The trigger acquisition exposure sequence diagram in non-overlap exposure mode

- **Overlap exposure**

In overlap exposure mode, the current frame image exposure process is overlap with the readout of the previous frame. That is, when the previous frame is reading out, the next frame image has been started exposure. As shown in the Figure 8-21, when the Nth frame image is reading out, the $N+1^{th}$ frame image has been started exposure.

The formula of overlap exposure frame period:

overlap exposure frame period ≤ exposure time + readout time

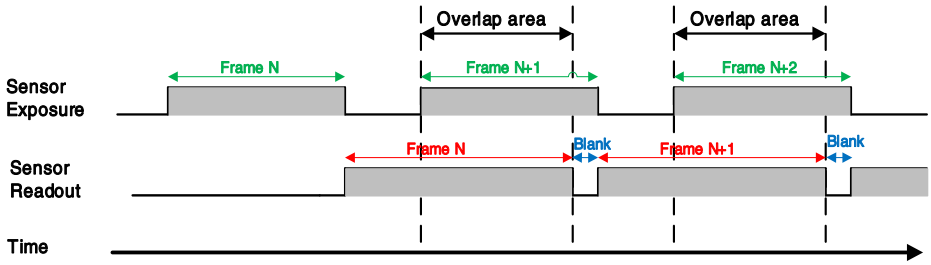

Figure 8-21 The exposure sequence diagram in overlap exposure mode

- **Continuous acquisition mode**

If the exposure time is greater than the frame blanking time, the exposure time and the readout time will be overlapped. As shown in the Figure 8-21.

- **Trigger acquisition mode**

When the interval between two triggers is less than the sum of exposure time and the readout time, it will occur overlap exposure, as shown in Figure 8-22.

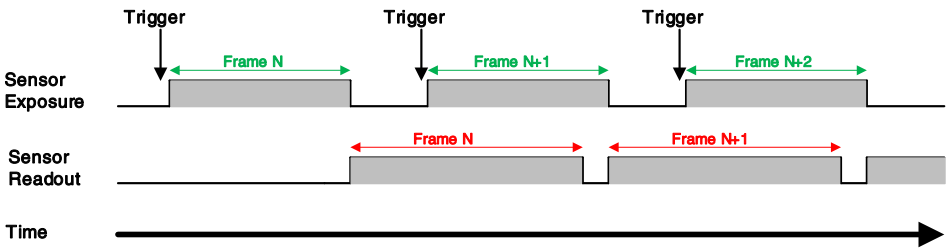

Figure 8-22 The trigger acquisition exposure sequence diagram in overlap exposure mode

Compared with non-overlap exposure mode, in overlap exposure mode, the camera can obtain higher frame rate.

8.2.11. Set Exposure

8.2.11.1. Set Exposure Mode

Two Exposure Mode are available: Timed exposure mode and TriggerWidth exposure mode. Among them, the TriggerWidth exposure mode determines the exposure time when the camera is configured for hardware triggering. And the exposure time depends on the width of the trigger signal, which is triggered by the rising edge (falling edge) set by the Trigger Activation.

1) Available exposure mode

a) Timed exposure mode

Timed exposure mode is available on all camera models. In this mode, the exposure time is determined by the camera's Exposure Time setting. If the camera is configured for software triggering, exposure starts when the software trigger signal is received and continues until the exposure time has expired.

If the camera is configured for hardware trigger:

- If rising edge triggering is enabled, exposure starts when the trigger signal rises and continues until the exposure time has expired, as shown in Figure 8-23

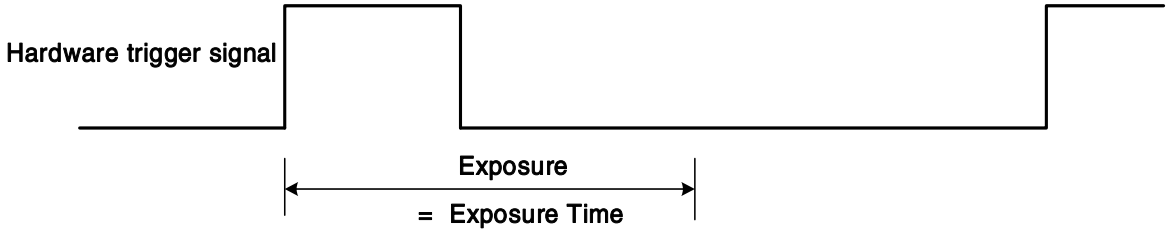

Figure 8-23 The sequence diagram in rising edge trigger of Timed exposure mode

- If falling edge triggering is enabled, exposure starts when the trigger signal falls and continue until the exposure time has expired, as shown in Figure 8-24

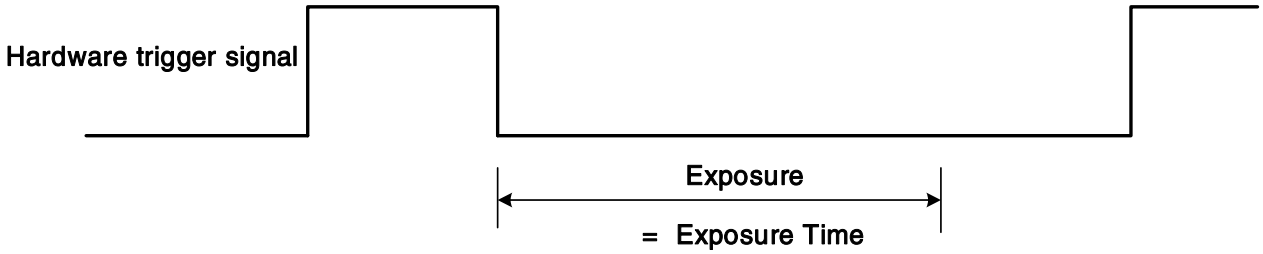

Figure 8-24 The sequence diagram in falling edge trigger of Timed exposure mode

Avoid overtriggering in Timed exposure mode. If the Timed exposure mode is enabled, do not attempt to send a new trigger signal while the previous exposure is still in progress. Otherwise, the trigger signal will be ignored, and a FrameStartOvertrigger event will be generated.

b) TriggerWidth exposure mode

In TriggerWidth exposure mode, the length of exposure is determined by the width of the hardware trigger signal. This function can meet the needs of users to change the exposure time of each frame of image.

- If rising edge triggering is enabled, exposure starts when the trigger signal rises and continue until the trigger signal falls, as shown in Figure 8-25

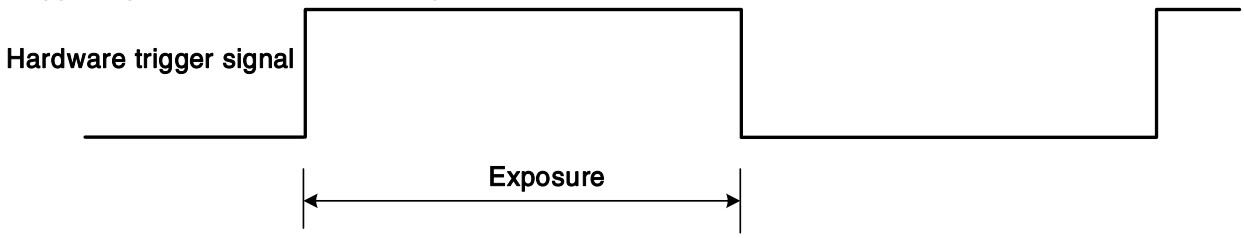

Figure 8-25 The sequence diagram in rising edge trigger of TriggerWidth exposure mode

- If falling edge triggering is enabled, exposure starts when the trigger signal falls and continue until the trigger signal rises, as shown in Figure 8-26

Figure 8-26 The sequence diagram in falling edge trigger of TriggerWidth exposure mode

Avoid overtriggering in TriggerWidth exposure mode. If the TriggerWidth exposure mode is enabled, do not send trigger signals at too high a rate. Otherwise, trigger signals will be ignored, and a FrameStartOvertrigger event will be generated.

The trigger signal width of the hardware triggering should not be shorter than the value of the entered ExposureOverlapTimeMax parameter.

2) Prerequisites

If TriggerWidth exposure mode is enabled:

a) Set the TriggerMode parameter to On.

b) Set the TriggerSource parameter to one of the available hardware trigger sources, e.g., Line0.

c) Set the ExposureMode parameter to TriggerWidth (if available).

8.2.11.2. Set Sensor Exposure Mode

- **Global Shutter**

The implementation process of global shutter is as shown in Figure 8-27, all the lines of the sensor are exposed at the same time, and then the sensor will read out the image date one by one.

The advantage of the global shutter is that all the lines are exposed at the same time, and the images do not appear offset and distortion when capturing moving objects.

The time width of the flash signal can be got by the following formula:

$$T_{strobe}=T_{exposure}$$

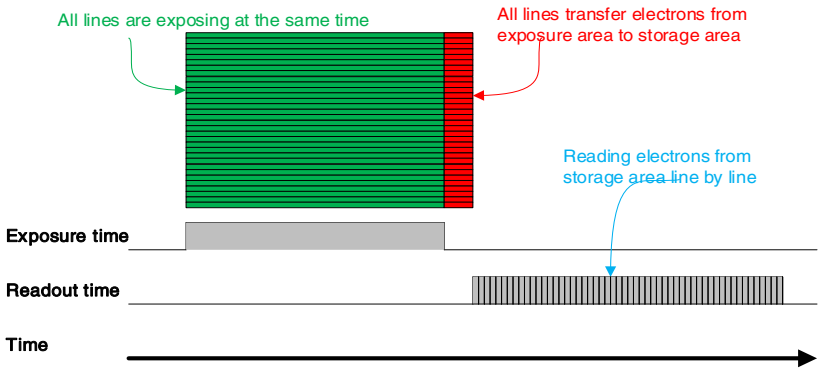

Figure 8-27 Global Shutter

- **Electronic Rolling Shutter**

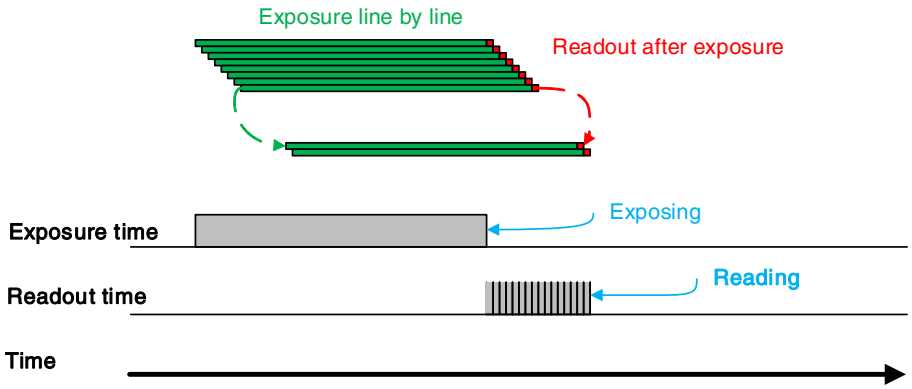

Figure 8-28 Electronic rolling shutter

- **Global Reset Release Shutter**

As the sensor starts exposure line by line, all of the pixels in the sensor start exposing at the same time. However, the end time of upper lines and lower lines of the same frame of image is different when capturing fast moving objects, so the distortion will occur. The Global Reset Release (GRR) shutter mode can effectively avoid the distortion. If the camera is operated in the GRR shutter mode, you must use flash lighting.

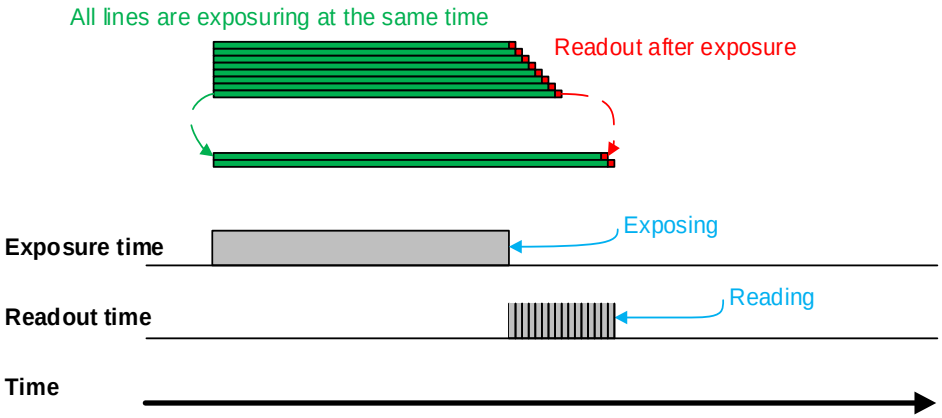

Figure 8-29 Global Reset Release shutter

The implementation process of electronic rolling shutter is as shown in Figure 8-28, different from the global shutter, electronic rolling shutter exposures from the first line, and starts the second line exposure after a row period. And so on, after N-1 line, the N line starts exposing. When the first line exposure ends, it begins to read out the data, and it need a row period time to read out one line (including the line blanking time). When the first line reads out completely, the second line just begins to read out, and so on, when the N-1 line is read out, the N line begins to read out, until the whole image is read out completely.

The electronic rolling shutter has low price and high resolution, which is a good choice for some static image acquisition.

The time width of the flash signal can be got by the following formula:

$$T_{strobe}=T_{exposure}-(N-1)\times T_{row}$$

8.2.11.3. Set Exposure Time

According to the length of the exposure time, two exposure time modes of the MARS 10GigE series camera is available: Standard exposure time mode and UltraShort exposure time mode.

In Standard exposure time mode, three exposure time adjustment modes are available: manual adjustment, one-time automatic adjustment and continuous automatic adjustment. The standard exposure time mode is the default setting. For the manual adjustment, please refer to section 8.2.10.Overlap Exposure and Non-overlap Exposure and one-time automatic adjustment and continuous automatic adjustment please refer to section 8.3.6.Auto Exposure/Auto Gain.

In UltraShort exposure time mode, the cameras only support manual adjustment of the exposure time. Since standard exposure time mode is the default setting, if you want to set the UltraShort exposure time mode, you first need to adjust the visibility level to guru and set the ExposureTimeMode to UltraShort under the acquisition control features window.

In UltraShort exposure time mode, the cameras do not support automatic adjustment of the exposure time, only support manual adjustment of the exposure time.

8.2.11.4. Set Value of Exposure Time

The MARS 10GigE series camera supports setting the exposure time, step: 1μs.

The exposure precision of the camera is limited by the sensor, when the steps in the user's interface and the demo display as 1μs, actually the steps is one row period. When the value of the ExposureTime cannot be divisible by the row period, round up to an integer should be taken, such as the row period is 21μs, setting 80μs exposure time, and the actual exposure time is 85μs.

When the external light source is sunlight or direct current (DC), the camera has no special requirements for the exposure time. When the external light source is alternating current (AC), it is recommended that the exposure time is better to be integral multiple of the light source cycle, for example, for a 100Hz light source, it is better to set the exposure time as an integral multiple of 10ms (the frequency of fluorescent lamp we usually use is 50Hz).

The cameras support Auto Exposure feature. If the Auto Exposure feature is enabled, the camera can adjust the exposure time automatically according to the environment brightness. See section 8.3.6 for more details.

8.2.12. Exposure Delay

The exposure delay function can effectively solve the strobe delay problem. Most strobes have a delay of at least tens of microseconds from trigger to light. When the camera is working in a small exposure mode, the fill light effect of the strobe will be affected. The exposure delay is achieved by the strobe signal and the delay of the actual exposure starting.

The unit of exposure delay is μs, the range is 0 ~ 5000μs, and the minimum value is 0.

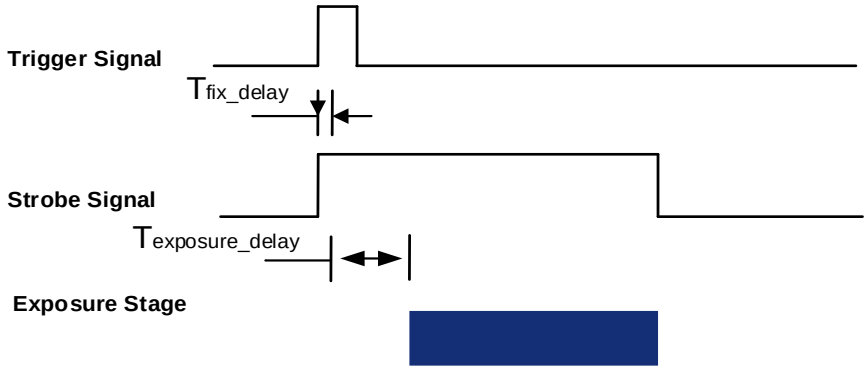

Figure 8-30 The exposure delay sequence diagram

When a hardware trigger signal is received to the sensor to start exposure, there is a small delay, which is called the exposure delay and consists of four parts of time, as shown in Figure 8-31

T1: The delay introduced by the hardware circuit when the external signal passes through the optocoupler or GPIO. The value is generally in the range of a few μs to several tens of μs. The delay is mainly affected by the connection mode, driving intensity and temperature. When the external environment is constant, the delay is generally stable.

T2: Delay introduced by the trigger filter. For example, if the trigger filter time is set to 50μs, T2 is 50μs.

T3: Trigger delay (trigger_delay), the camera supports trigger delay feature. If the trigger delay is set to 200μs, T3 is 200μs.

T4: The sensor timing sequence delay, the internal exposure of the sensor is aligned with the row timing sequence, so T4 has a maximum row cycle jitter. The value of each sensor is different. Some products with large delay time (several hundred μs or more) have additional configuration time counted in T4.

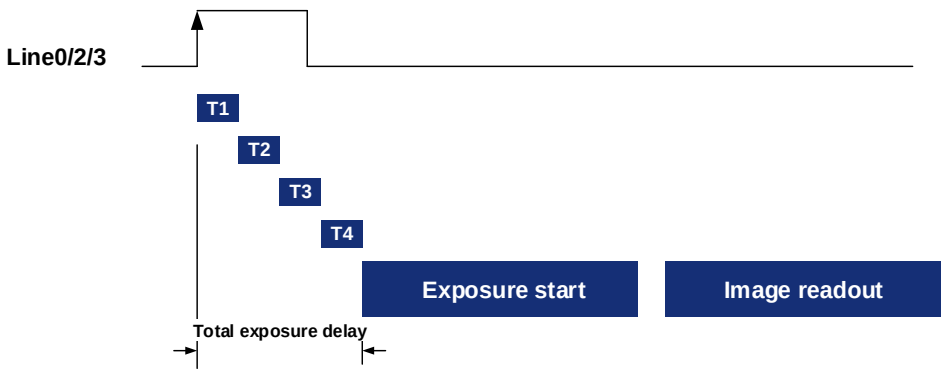

Figure 8-31 Exposure delay

The following table shows the total exposure delay time for each sensor.

T1 is calculated according to the typical delay (5μs) of line0. If it is line2, T1 can be ignored.

T2 is calculated as 0μs.

T3 is calculated as 0μs.

T4 is calculated according to the ROI settings and features of each sensor.

The exposure delay data is as follows:

Model	Exposure delay (μs)
MARS-170-662GTM/C	**Close Binning:** BayerRG8 / Mono8 (BPP8) : 14.33μs ~ 15.50μs BayerRG8 / Mono8 (BPP10) : 16.11μs ~ 17.50μs BayerRG8 / Mono8 (BPP12) : 18.19μs ~ 19.83μs BayerRG10 / Mono10: 20.556μs ~ 22.50μs BayerRG12 / Mono12: 20.556μs ~ 22.50μs Bayer RG12Packed / Mono12Packed: 18.19μs ~ 19.83μs RGB8 (BPP8) : 28.407μs ~ 31.33μs RGB8 (BPP10) : 28.407μs ~ 31.33μs RGB8 (BPP12) : 28.407μs ~ 31.33μs **Open Binning:** BayerRG8 / Mono8 (BPP8) : 14.33μs ~ 15.50μs BayerRG8 / Mono8 (BPP10) : 16.11μs ~ 17.50μs BayerRG8 / Mono8 (BPP12) : 18.19μs ~ 19.83μs BayerRG10 / Mono10: 16.111μs ~ 17.50μs BayerRG12 / Mono12: 18.19μs ~ 19.83μs Bayer RG12Packed / Mono12Packed: 18.19μs ~ 19.83μs RGB8 (BPP8) : 16.70μs ~ 18.17μs RGB8 (BPP10) : 16.70μs ~ 18.17μs RGB8 (BPP12) : 18.19μs ~ 19.83μs
MARS-280-409GTM/C	**Close Binning:** BayerRG8 / Mono8 (BPP8) : 11.296μs ~ 12.87μs BayerRG8 / Mono8 (BPP10) : 11.96μs ~ 13.70μs BayerRG8 / Mono8 (BPP12) : 16.26μs ~ 19.07μs BayerRG10 / Mono10 : 14.407μs ~ 16.759μs BayerRG12 / Mono12 : 16.26μs ~ 19.07μs

© 2026 China Daheng Group, Inc. Beijing Image Vision Technology Branch

	Bayer RG12Packed / Mono12Packed : 16.26μs ~ 19.07μs RGB8 (BPP8) : 19.148μs ~ 22.685μs RGB8 (BPP10) : 19.148μs ~ 22.685μs RGB8 (BPP12) : 19.148μs ~ 22.685μs **Open Binning:** BayerRG8 / Mono8 (BPP8) : 11.296μs ~ 12.87μs BayerRG8 / Mono8 (BPP10) : 11.96μs ~ 13.70μs BayerRG8 / Mono8 (BPP12) : 16.26μs ~ 19.07μs BayerRG10 / Mono10 : 11.96μs ~ 13.70μs BayerRG12 / Mono12 : 16.26μs ~ 19.07μs Bayer RG12Packed / Mono12Packed : 16.26μs ~ 19.07μs RGB8 (BPP8) : 12.037μs ~ 13.796μs RGB8 (BPP10) : 12.037μs ~ 13.796μs RGB8 (BPP12) : 16.26μs ~ 19.07μs
MARS-321-176GTM-TN-SWIR MARS-533-134GTM-TN-SWIR MARS-533-170GTM-TN-SWIR	BPP10: 11.5μs ~ 15.0μs (1x periodic jitter) BPP12: 18.8μs ~ 24.8μs (1x periodic jitter)
MARS-561-207GTM/C(-NF)	Non-overlap Exposure: 5μs ~6μs Overlap Exposure: BayerGB8 / Mono8: 9.4μs ~ 10.4μs BayerGB10 / Mono10: 13.8μs ~ 14.8μs
MARS-900-120GTM/C(-NF) MARS-1840-63GTM/C(-NF)	Non-overlap Exposure: 5μs ~6μs Overlap Exposure: BayerGB8 / Mono8: 12.6μs ~ 13.6μs BayerGB12 / Mono12: 20.2μs ~ 21.2μs
MARS-1261-90GTM/C(-NF)	BayerRG8 / Mono8: 24.706μs BayerRG12 / Mono12: 39.082μs
MARS-1610-52GTM/C(-NF) MARS-2440-35GTM/C(-NF) MARS-2440-35GTM-NF-V	When Decimation is Off: BayerGB8 / Mono8 (BPP8): 65.38μs ~ 71.418μs BayerGB10 / Mono10: 75.672μs ~ 84.506μs BayerGB12 / Mono12: 75.672μs ~ 84.506μs When Decimation is On: BayerGB8 (BPP8): 51.896μs ~ 55.804μs BayerGB10: 45.75μs ~ 149.825μs BayerGB12: 61.3μs ~ 66.93μs Mono8 (BPP8): 51.896μs ~ 55.804μs Mono10: 53.9μs ~ 57.975μs Mono12: 72.56μs ~ 78.19μs

© 2026 China Daheng Group, Inc. Beijing Image Vision Technology Branch

MARS-2020-42GTM/C(-NF)	When Decimation is Off: BayerGB8 / Mono8 (BPP8): 55.56μs ~ 60.616μs BayerGB10 / Mono10: 55.672μs ~ 62.006μs BayerGB12 / Mono12: 65.152μs ~ 72.671μs When Decimation is On: BayerGB8 (BPP8): 51.896μs ~ 55.804μs BayerGB10: 45.75μs ~ 49.825μs BayerGB12: 61.3μs ~ 66.93μs Mono8 (BPP8): 67.528μs ~ 71.436μs Mono10: 53.9μs ~ 57.975μs Mono12: 72.56μs ~ 78.19μs
MARS-2621-42GTM/C(-NF) MARS-2622-42GTM/C(-NF) MARS-2621-42GTM(-NF)-NIR MARS-2622-42GTM(-NF)-NIR MARS-2621-42GTM/C-S MARS-2622-42GTM/C-S MARS-2621-42GTM-NIR-S MARS-2622-42GTM-NIR-S	Non-overlap Exposure: 5μs ~6μs Overlap Exposure: BayerGB8 / Mono8: 14.3μs ~ 15.3μs BayerGB12 / Mono12: 23.6μs ~ 24.6μs
MARS-5000-24GTM/C(-NF/TF)	Non-overlap Exposure: 5μs ~6μs Overlap Exposure: BayerGB8 / Mono8: 14.4μs ~ 15.4μs BayerGB12 / Mono12: 23.8μs ~ 24.8μs
MARS-6500-18GTM/C(-NF/TF) MARS-6501-18GTM/C(-NF/TF)	Non-overlap Exposure: 5μs ~6μs Overlap Exposure: $(2*T_{row}+5)$μs ~ $(2*T_{row}+6)$μs Note: T_{row} see section 8.6.1 Maximum Allowable Frame Rate
MARS-6100-18GTM/C-TF MARS-15100-6GTM/C-TF	GRR Mode: $(6* T_{row} +4.47)$ μs Rolling Mode: $4*T_{row}$ μs Note: T_{row} see section 8.6.1 Maximum Allowable Frame Rate

Table 8-2 the cameras exposure delay range

8.3. Table Basic Features

8.3.1. Gain

The MARS 10GigE series camera can adjust the analog gain, the adjustable range of every model refer to 4.General Specifications.

When the analog gain changes, the response curve of the camera changes, as shown in Figure 8-32. The horizontal axis represents the output signal of the sensor in the camera, and the vertical axis represents the gray value of the output image. When the amplitude of the sensor output signal remains constant, increasing the gain makes the response curve steeper, and that makes the image brighter. For every 6dB increases of the gain, the gray value of the image will double. For example, when the camera has a gain of 0dB, the image gray value is 126, and if the gain is increased to 6dB, the image gray will increase to

252. Thus, increasing gain can be used to increase image brightness. When the environment brightness and exposure time keep constant, another way to increase the image brightness is to change the camera's digital gain by modifying the lookup table.

Note that increasing the analog gain or digital gain will amplify the image noise.

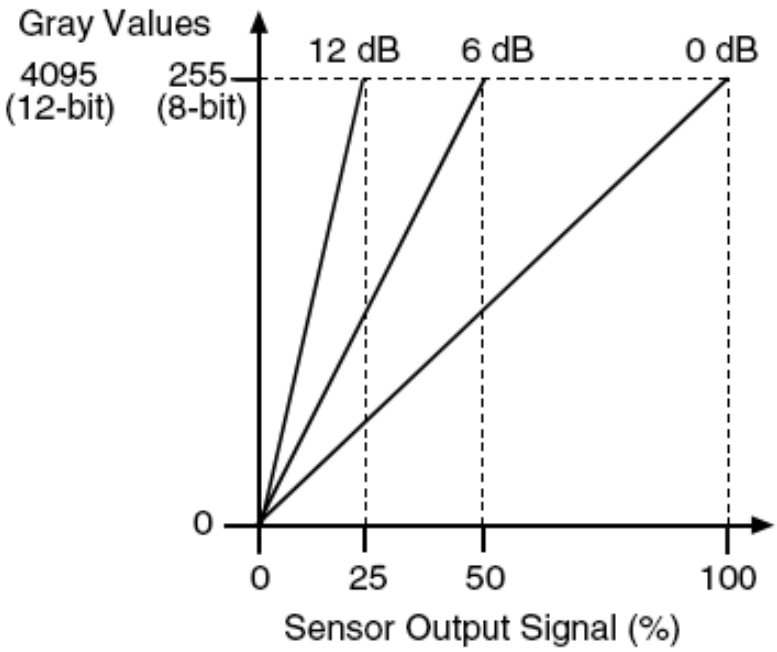

Figure 8-32 The cameras response curve

8.3.2. Sensor Bit Depth

By setting the "Sensor Bit Depth", the user can change the bit depth of the sensor output data. Reducing the sensor bit depth improves the camera frame rate, and increasing the sensor bit depth improves the image quality.

The sensor bit depth function is associated with the pixel format. When the pixel format is 8bit, the sensor bit depth can be selected as BPP8 or BPP12. When the pixel format is 10bit, the sensor bit depth only supports BPP10. When the pixel format is 12bit, the sensor bit depth only supports BPP12.

8.3.3. PGA Gain

Compared to digital gain, PGA (programmable-gain amplifier) gain does not amplify the noise caused by ADC, so it has a smaller impact on SNR. The steps set by the user is different from the actual steps. For example, the PGA gain of the MARS-5000-24GTM/C camera in the remove standard parameter range is [0.75x-6x], the steps are 0.01x, and the actual steps are 0.25x.

Model	Standard Parameter Range		Remove Standard Parameter Range	
	Range	Actual Steps	Range	Actual Steps
MARS-561-207GTM/C(-NF)	[1.00-2.00]	0.25x	[1.00-2.00]	0.25x
MARS-900-120GTM/C(-NF)	[1.00-4.00]	0.25x	[1.00-4.00]	0.25x

MARS-5000-24GTM/C(-NF/TF) MARS-6500/6501M/C(-NF/TF)	[0.75x-6x]	0.25x	[0.75x-6x]	0.25x

8.3.4. Pixel Format

By setting the pixel format, the user can select the format of output image. The available pixel formats depend on the camera model and whether the camera is monochrome or color.

The image data starts from the upper left corner, and each pixel is output brightness value of each pixel line from left to right and from top to bottom.

- Mono8

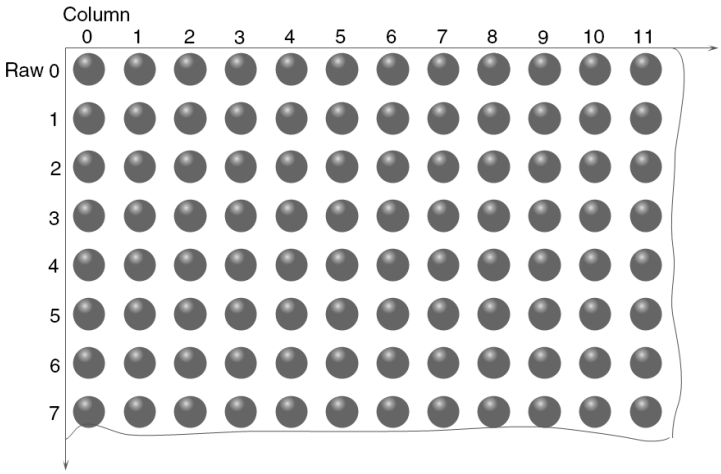

When the pixel format is set to Mono8, the brightness value of each pixel is 8bits. The format in the memory is as follows:

Y00	Y01	Y02	Y03	Y04	……
Y10	Y11	Y12	Y13	Y14	……
……					

Among them Y00, Y01, Y02 … are the gray value of each pixel that starts from the first row of the image. Then the gray value of the second row pixels of the images is Y10, Y11, and Y12…

- **Mono10/Mono12**

When the pixel format is set to Mono10 or Mono12, each pixel is 16 bits. When Mono10 is selected, the effective data is 10 bits, the 6 of the MSB 16 bits data are set to zero. When Mono12 is selected, the effective data is 12 bits, the 4 of the MSB 16 bits data are set to zero. Note that the brightness value of each pixel contains two bytes, arranged in little-endian mode. The format is as follows:

Y00	Y01	Y02	Y03	Y04	……
Y10	Y11	Y12	Y13	Y14	……
……					

Among them Y00, Y01, Y02…are the gray value of each pixel that start with the first row of the image. The first byte of each pixel is low 8 bits of brightness, and the second byte of each pixel is high 8 bits of brightness.

- **BayerRG8**

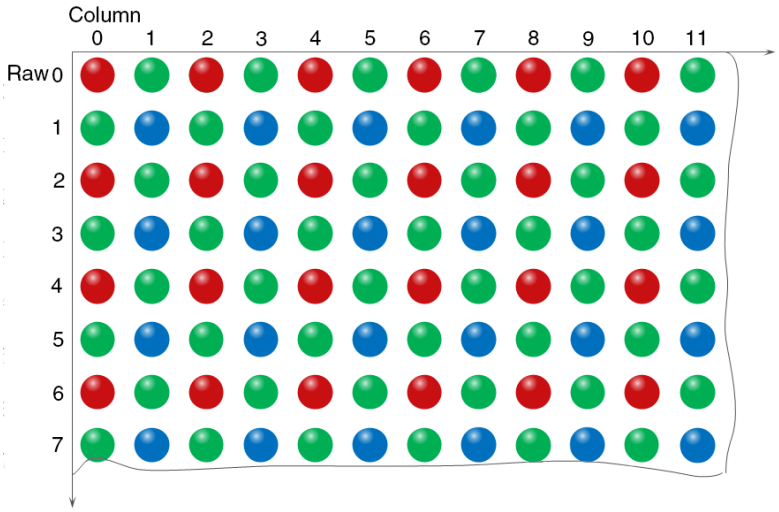

When the pixel format is set to BayerRG8, the value of each pixel in the output image of the camera is 8 bits. According to the location difference, the three components of red, green and blue are respectively represented. The format in the memory is as follows:

R00	G01	R02	G03	R04	……
G10	B11	G12	B13	G14	……
……					

Where R00 is the first pixel value of the first row (for the red component), G01 represents the second pixel value (for the green component), and so on, so that the first row pixel values are arranged. G10 is the first pixel value of the second row (for the green component), the B11 is the second pixel value (for the blue component), and so on, and the second row of pixel values are arranged.

- **BayerRG10/BayerRG12**

When the pixel format is set to BayerRG10 or BayerRG12, the value of each pixel in the output image of the camera is 16 bits. According to the location difference, the three components of red, green and blue are respectively represented. The format in the memory is as follows:

R00	G01	R02	G03	R04	……
G10	B11	G12	B13	G14	……
……					

Each pixel is the same as BayerRG8, the difference is that each pixel is made up of two bytes, the first byte is the low 8 bits of the pixel value, and the second byte is the high 8 bits of the pixel value.

© 2026 China Daheng Group, Inc. Beijing Image Vision Technology Branch

- **BayerGR8**

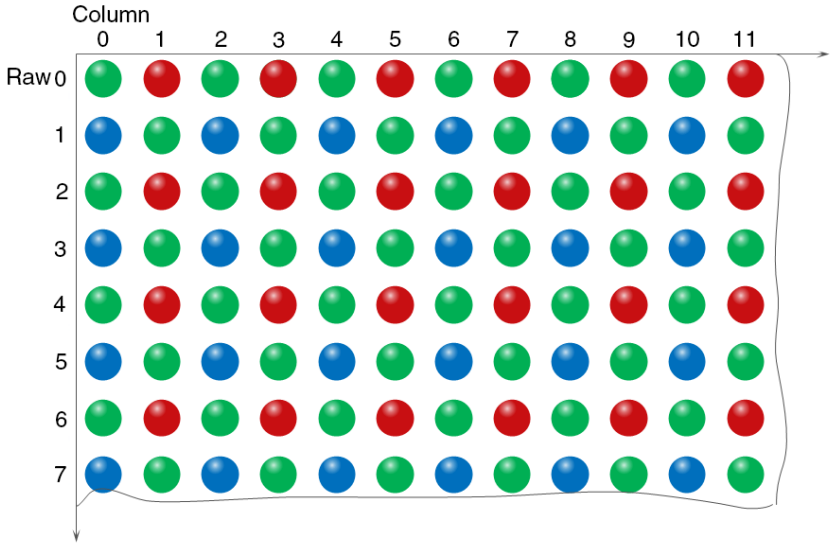

When the pixel format is set to BayerGR8, the value of each pixel in the output image of the camera is 8 bits. According to the location difference, the three components of red, green and blue are respectively represented. The format in the memory is as follows:

G00	R01	G02	R03	G04	……
B10	G11	B12	G13	B14	……
……					

Where G00 is the first pixel value of the first row (for the green component), R01 represents the second pixel value (for the red component), and so on, so that the first row pixel values are arranged. B10 is the first pixel value of the second row (for the blue component), the G11 is the second pixel value (for the green component), and so on, and the second row of pixel values are arranged.

- **BayerGR10/BayerGR12**

When the pixel format is set to BayerGR10 or BayerGR12, the value of each pixel in the output image of the camera is 16 bits. According to the location difference, the three components of red, green and blue are respectively represented. The format in the memory is as follows:

G00	R01	G02	R03	G04	……
B10	G11	B12	G13	B14	……
……					

Each pixel is the same as BayerGR8, the difference is that each pixel is made up of two bytes, the first byte is the low 8 bits of the pixel value, and the second byte is the high 8 bits of the pixel value.

- **BayerGB8**

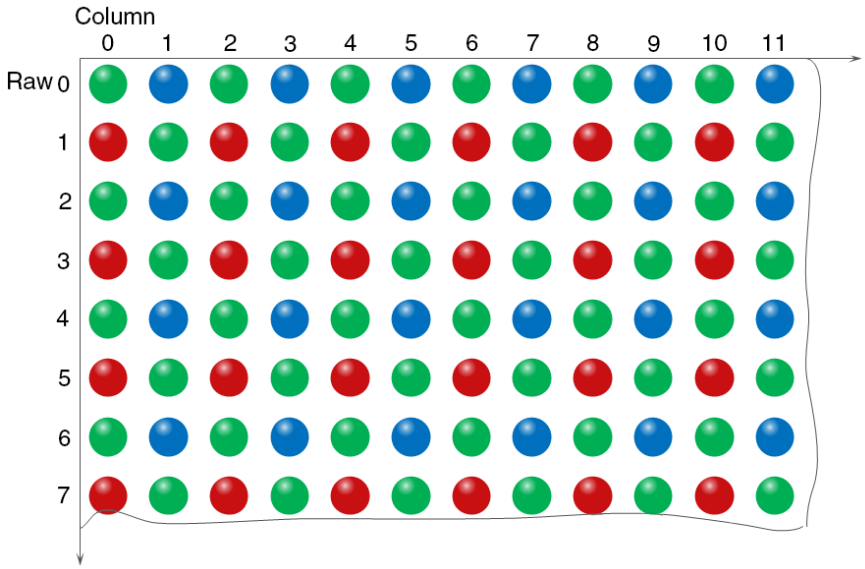

When the pixel format is set to BayerGB8, the value of each pixel in the camera's output image is 8 bits, which represents the red, green, and blue components based on positional differences. The arrangement format in memory is as follows:

G00	B01	G02	B03	G04	……
R10	G11	R12	G13	R14	……
……					

As shown, G00 represents the first pixel value (green component) in the first row, B01 represents the second pixel value (blue component), and so on, completing the arrangement of pixel values in the first row. R10 represents the first pixel value (red component) in the second row, G11 represents the second pixel value (green component), and so on, completing the arrangement of pixel values in the second row.

- **BayerGB10/BayerGB12**

When the pixel format is set to BayerGB10 or BayerGB12, the value of each pixel in the camera's output image is 16 bits, which represents the red, green, and blue components based on positional differences. The arrangement format in memory is as follows:

G00	B01	G02	B03	G04	……
R10	G11	R12	G13	R14	……
……					

The arrangement position of each pixel is the same as BayerGB8, except that each pixel value consists of two bytes. The first byte is the low 8bits of the pixel value, and the second byte is the high 8bits of the pixel value.

8.3.5. ROI

By setting the ROI of the image, the camera can transmit the specific region of the image, and the output region's parameters include OffsetX, OffsetY, width and height of the output image. The camera only reads the image data from the sensor's designated region to the memory, and transfer it to the host, and the other regions' image of the sensor will be discarded.

By default, the image ROI of the camera is the full resolution region of the sensor. By changing the OffsetX, OffsetY, width and height, the location and size of the image ROI can be changed. The OffsetX refers to the starting column of the ROI, and the OffsetY refers to the starting row of the ROI.

The coordinates of the ROI of the image are defined the 0th line and 0th columns as the origin of the upper left corner of the sensor. As shown in the figure, the OffsetX of the ROI is 4, the OffsetY is 4, the height is 8 and the width is 12.

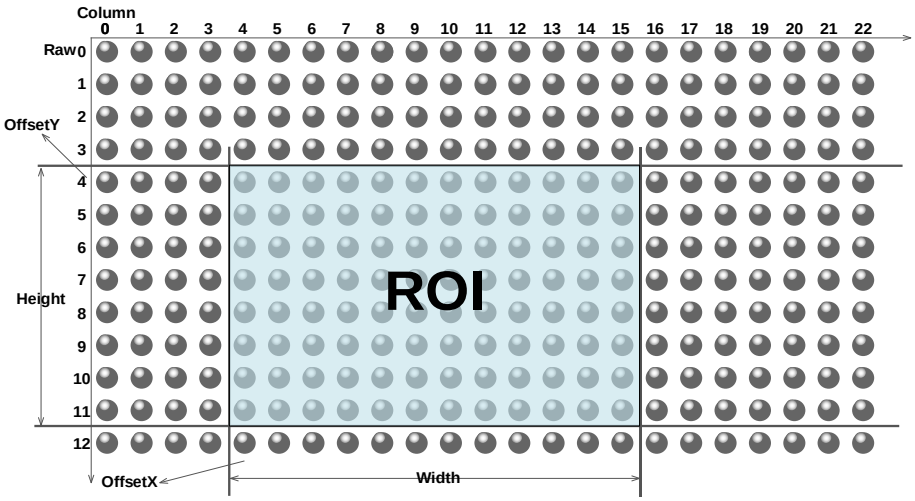

When reducing the height of the ROI, the maximum frame rate of the camera will be raised. Please refer to section 8.6.1 for specific effects on the acquisition frame rate.

8.3.6. Auto Exposure/Auto Gain

8.3.6.1. ROI Setting of Auto Exposure/ Auto Gain

For Auto Exposure and Auto Gain, you can specify a portion of the sensor array and only the pixel data from the specified portion will be used for auto function control.

AAROI is defined by the following way:

AAROIOffsetX:	The offset of the X axis direction.
AAROIOffsetY:	The offset of the Y axis direction.
AAROIWidth:	The width of ROI.
AAROIHeight:	The height of ROI.

Offset is the offset value that relative to the upper left corner of the image. The step of AAROIOffsetX and AAROIWidth is 16. The step of AAROIOffsetY and AAROIHeight is 2. The setting of the AAROI depends on the size of the current image and cannot exceed the range of the current image. That is to say, assuming

the Width and Height are parameters for users captured image, then the AAROI setting need to meet the condition 1:

AAROIWidth+ AAROIOffsetX≤Width
AAROIHeight+ AAROIOffsetY≤Height

If condition 1 is not met, the user cannot set the ROI.

The default value of ROI is the entire image, you can set the ROI according to your need. Where the minimum value of AAROIWidth can be set to 16, and the maximum value is equal to the current image width. The minimum value of AAROIHeight can be set to 16, and the maximum value is equal to the current image height, they are all need to meet the condition1.

For example: the current image width is 1024, the height is 1000, and then the ROI setting is:

AAROIOffsetX＝100
AAROIOffsetY＝50
AAROIWidth＝640
AAROIHeight＝480

The relative position of the ROI and the image is shown in Figure 8-33.

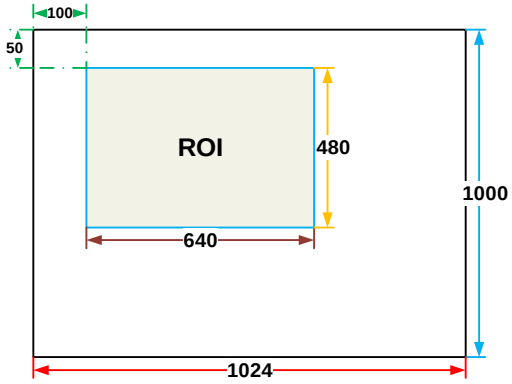

Figure 8-33 An example for the relative position between the ROI and the current image

8.3.6.2. Auto Gain

The auto gain can adjust the camera's gain automatically, so that the average gray value in AAROI is achieved to the expected gray value. The auto gain can be controlled by "Once" and "Continuous" mode.

When using the "Once" mode, the camera adjusts the image data in the AAROI to the expected gray value once, then the camera will turn off the auto gain feature. When using the "Continuous" mode, the camera will continuous adjust the gain value according to the data of the AAROI, so that the data in the AAROI is kept near to the expected gray level.

The expected gray value is set by the user, and it is related to the data bit depth. For 8bit pixel data, the expected gray value range is 0-255, for 10bit pixel data, the expected gray value range is 0-1023, and for 12bit pixel data, the expected gray value range is 0-4095.

The camera adjusts the gain value within the range [minimum gain value, maximum gain value] which is set by the user.

The auto gain feature can be used with the auto exposure at the same time, when target grey is changed from dark to bright, the auto exposure adjust is prior to auto gain adjust. Vice versa, when target grey is changed from bright to dark, the auto gain adjust is prior to auto exposure adjust.

8.3.6.3. Auto Exposure

The auto exposure can adjust the camera's exposure time automatically, so that the average gray value in AAROI can achieve to the expected gray value. The auto exposure can be controlled by "Once" and "Continuous" mode.

When using the "Once" mode, the camera adjusts the image data in the AAROI to the expected gray value once, then the camera will close the auto exposure feature. When using the "Continuous" mode, the camera will continuous adjusting the exposure time according to the data of the AAROI, so that the data in the ROI is kept near to the expected gray level.

The expected gray value is set by the user and it is related to the data bit depth. For 8bit pixel data, the expected gray value range is 0-255, and for 12bit pixel data, the expected gray value range is 0-4095.

The camera adjusts the exposure time in the range [minimum exposure time, maximum exposure time] which is set by the user.

The auto exposure feature can be used with the auto gain at the same time, when target grey is changed from dark to bright, the auto exposure adjust is prior to auto gain adjust. Vice versa, when target grey is changed from bright to dark, the auto gain adjust is prior to auto exposure adjust.

8.3.7. Test Pattern

The MARS 10GigE series camera supports three test images: gray gradient test image, static diagonal gray gradient test image, and moving diagonal gray gradient test image. When the camera captures in RAW12 mode, the gray value of test image is: the pixel gray value in RAW8 mode multiplies by 16, as the output of pixel gray value in RAW12 mode.

The following three test images are illustrated in the RAW8 mode.

- **GrayFrameRampMoving**

In the gray gradient test image, all the pixels' gray values are the same in the frame. In the adjacent frame, the gray value of the next frame increases by 1 compared to the previous frame, until to 255, and then the next frame gray value returns to 0, and so on. A printscreen of a single frame is shown in Figure 8-34:

Figure 8-34 Gray gradient test image

- **SlantLineMoving**

In the moving diagonal gray gradient test image, the first pixel value of adjacent row in each frame increases by 1, until the last row. When the pixel gray value increases to 255, the next pixel gray value returns to 0. The first pixel gray value of adjacent column increases by 1, until the last column. When the pixel gray value increases to 255, the next pixel gray value returns to 0.

In the moving diagonal gray gradient test image, in the adjacent frame, the first pixel gray value of the next frame increases by 1 compared to the previous frame. So, in the dynamic image, the image is scrolling to the left. A printscreen of the moving diagonal gray gradient test image is shown in Figure 8-35:

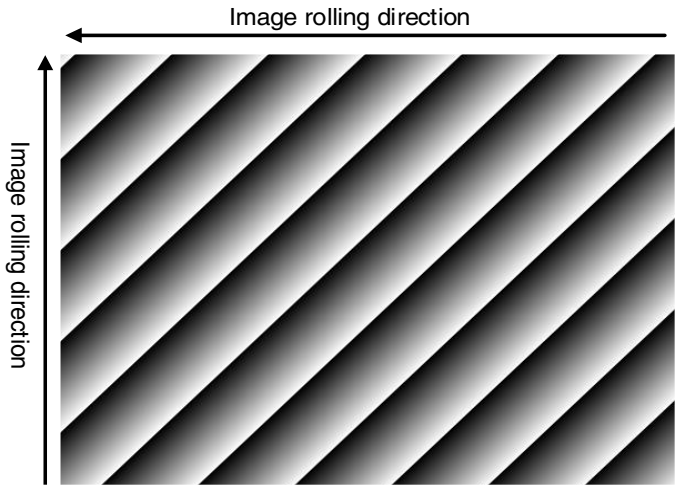

Figure 8-35 Moving diagonal gray gradient test image

- **SlantLine**

In the static diagonal gray gradient test image, the first pixel gray value is 0, the first pixel gray value of adjacent row increases by 1, until the last row. When the pixel gray value increases to 255, the next pixel gray value returns to 0. The first pixel gray value of adjacent column increases by 1, until the last column. When the pixel gray value increases to 255, the next pixel gray value returns to 0.

Compared to the moving diagonal gray gradient test image, in the adjacent image of the static diagonal gray gradient test image, the gray value in the same position remains unchanged. A printscreen of the static diagonal gray gradient test image is shown in Figure 8-36.

Figure 8-36 Static diagonal gray gradient test image

8.3.8. User Set Control

By setting various parameters of the camera, the camera can perform the best performance in different environments. There are two ways to set parameters: one is to modify the parameters manually, and the other is to load parameter set. In order to save the specific parameters of the users, avoiding to set the parameters every time when you open the camera, the MARS 10GigE series camera provides a function to save the parameter set, which can easily save the parameters that the user use, including the control parameters that the camera needed. There three types of configuration parameters: the currently effective configuration parameters, the vendor default configuration parameters (Default), and the user configuration parameters (UserSet).

Three operations can be performed on the configuration parameters, including save parameters (UserSetSave), load parameters (UserSetLoad), and set the startup parameter set (UserSetDefault). The UserSetSave is to save the effective configuration parameters to the user configuration parameter set which is set by the user. The UserSetLoad is to load the vendor default configuration parameters (Default) or the user configuration parameters (UserSet) to the current effective configuration parameters. The UserSetDefault is refer to the user can specify a set of parameters which to be loaded into the effective configuration parameters automatically when the camera is reset or powered on. And the camera can work under this set of parameters. This set of parameters can be vendor default configuration parameters or user configuration parameters.

1) The type of configuration parameters

The type of configuration parameters includes: the current effective configuration parameters, vendor default configuration parameters, user configuration parameters.

The current effective configuration parameters: Refers to the current control parameters used by the camera. Using API function or Demo program to modify the current control parameters of the camera is to modify the effective configuration parameters. The effective parameters are stored in volatile memory of the camera, so when the camera is reset or powered on again, the effective configuration parameters will be lost.

The vendor default configuration parameters (Default): Before the camera leaves the factory, the camera manufacturer will test the camera to assess the camera's performance and optimize the configuration parameters of the camera. The manufacturer's default configuration parameters are the camera configuration parameters optimized by the manufacture in a particular environment, these parameters are stored in the non-volatile memory of the camera, so when the camera is reset or powered on again, the effective configuration parameters will not be lost, and these parameters cannot be modified.

The user configuration parameters (UserSet): The effective parameters are stored in volatile memory of the camera, so when the camera is reset or powered on again, the effective configuration parameters will be lost. You can store the effective configuration parameters to the user configuration parameters, the user configuration parameters are stored in the non-volatile memory of the camera, so when the camera is reset or powered on again, the user configuration parameters will not be lost. The cameras can store a set of user configuration parameters.

2) The operation of configuration parameters

The operations for configuration parameters include the following three types: save parameters, load parameters and set the UserSetDefault.

Save parameters (UserSetSave): Save the current effective configuration parameters to the user configuration parameters. The storage steps are as follows:

1) Modify the camera's configuration parameters, until the camera runs to the user's requirements.

2) Use UserSetSelector to select UserSet0. Execute UserSetSave command.

The camera's configuration parameters which are saved in the user parameter set include:

- Gain
- ExposureTime
- PixelFormat
- OffsetX, OffsetY, ImageWidth, ImageHeight
- GevSCPSPacketSize, GevSCPD
- TriggerMode, TriggerSource, TriggerPolarity, TriggerDelay
- TriggerFilterRaisingEdge, TriggerFilterFallingEdge
- LineMode, LineInverter, LineSource, UserOutputValue
- FrameBufferOverwriteActive
- TestPattern
- ExpectedGrayValue
- ExposureAuto, AutoExposureTimeMax, AutoExposureTimeMin
- GainAuto, AutoGainMax, AutoGainMin
- AAROIOffsetX, AAROIOffsetY, AAROIWidth, AAROIHeight
- BalanceWhiteAuto, AWBLampHouse
- AWBROIOffsetX, AWBROIOffsetY, AWBROIWidth, AWBROIHeight
- BalanceRatio(R/G/B)

Load parameters (UserSetLoad): Load the vendor default configuration parameters or the user configuration parameters into the effective configuration parameters. After this operation is performed, the effective configuration parameters will be covered by the loaded parameters which are selected by the user, and the new effective configuration parameters are generated. The operation steps are as follows:

1) Use UserSetSelector to select Default or UserSet0.

2) Execute UserSetLoad command to load the User Set specified by UserSetSelector to the device and makes it active.

Change startup parameter set (UserSetDefault): The user can use UserSetDefault to select Default or UserSet0 as the UserSetDefault. When the camera is reset or powered on again, the parameters in the UserSetDefault will be loaded into the effective configuration parameters.

© 2026 China Daheng Group, Inc. Beijing Image Vision Technology Branch

8.3.9. Device User ID

The MARS 10GigE series camera provides programmable device user ID function, the user can set a unique identification for the camera, and can open and control the camera by the unique identification.

The user-defined name is a string which maximum length is 16 bytes, the user can set it by the following ways:

1) Set by the **IP Configurator**, for details please see section" GigE IP Configurator":

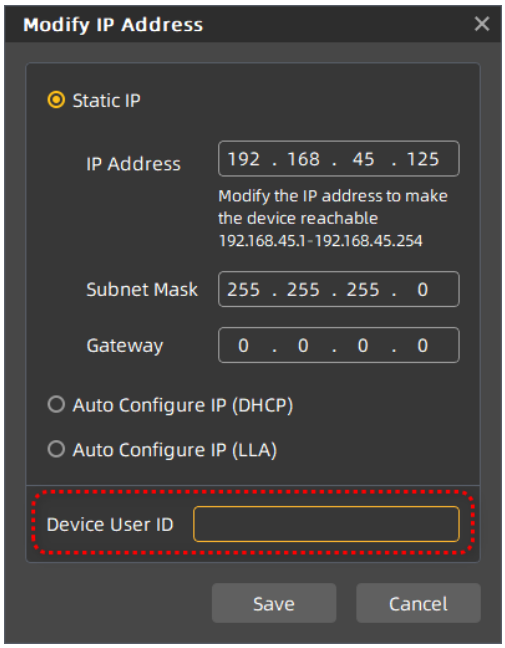

Figure 8-37 IP Configurator

2) Set by calling the software interface, for details please see the Programmer's Guide.

When using multi-cameras at the same time, it is necessary to ensure the uniqueness of the user-defined name of each camera, otherwise, an exception will occur when the camera is opened.

8.3.10. Timestamp

The timestamp feature counts the number of ticks generated by the camera's internal device clock. As soon as the camera is powered on, it starts generating and counting clock ticks. The counter is reset to 0 whenever the camera is powered off and on again. Some of the camera's features use timestamp values, such as event, and timestamps can be used to test the time spent on some of the camera's operations.

Timestamp clock frequency: The frequency of timestamp counter is obtained by reading the camera's "timestamp tick frequency". The unit is 1ns.

Timestamp latch: Latch the current timestamp value. The timestamp value needs to be read through the "timestamp latch value".

Timestamp reset: Reset the timestamp counter and recount from 0.

© 2026 China Daheng Group, Inc. Beijing Image Vision Technology Branch

Timestamp latch reset: First latch the current timestamp value and then reset the timestamp counter.

Timestamp latched value: Save the value of the latched timestamp, and the specific time can be calculated based on the timestamp clock frequency.

8.3.11. Binning

The feature of Binning is to combine multiple pixels adjacent to each other in the sensor into a single value, and process the average value of multiple pixels or sum the multiple pixel values, which may increase the signal-to-noise ratio or the camera's response to light.

- **How Binning Works**

On color cameras, the camera combines (sums or averages) the pixel values of adjacent pixels of the same color:

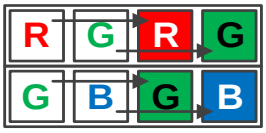

Figure 8-38 Horizontal color Binning by 2

Figure 8-39 Vertical color Binning by 2

When the horizontal Binning factor and the vertical Binning factor are both set to 2, the camera combines the adjacent 4 sub-pixels of the same color according to the corresponding positions, and outputs the combined pixel values as one sub-pixel.

Figure 8-40 Horizontal and vertical color Binning by 2×2

On monochrome cameras, the camera combines (sums or averages) the pixel values of directly adjacent pixels:

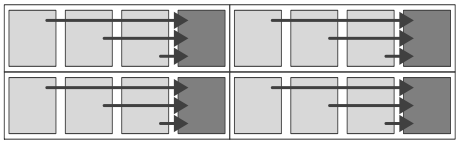

Figure 8-41 Horizontal mono Binning by 4

- **Binning Factors**

Two types of Binning are available: horizontal Binning and vertical Binning. You can set the Binning factor in one or two directions.

Horizontal Binning is the processing of pixels in adjacent rows.

Vertical Binning is the processing of pixels in adjacent columns.

Binning factor 1: Disable Binning.

Binning factor 2, 4: Indicate the number of rows or columns to be processed.

For example, the horizontal Binning factor 2 indicates that the Binning is enabled in the horizontal direction, and the pixels of two adjacent rows are processed.

- **Binning Modes**

The Binning mode defines how pixels are combined when Binning is enabled. Two types of the Binning mode are available: Sum and Average.

Sum: The values of the affected pixels are summed and then output as one pixel. This improves the signal-to-noise ratio, but also increases the camera's response to light.

Average: The values of the affected pixels are averaged. This greatly improves the signal-to-noise ratio without affecting the camera's response to light.

- **Considerations When Using Binning**

1) Effect on ROI settings

When Binning is used, the value of the current ROI of the image, the maximum ROI of the image, the auto function ROI, and the auto white balance ROI will change. The changed value is the original value (the value before the setting) divided by the Binning factor.

For example, assume that you are using a camera with a 1200 x 960 sensor. Horizontal Binning by 2 and vertical Binning by 2 are enabled. In this case, the maximum ROI width is 600 and the maximum ROI height is 480.

2) Increased response to light

Using Binning with the Binning mode set to **Sum** can significantly increase the camera's response to light. When pixel values are summed, the acquired images may look overexposed. If this is the case, you can reduce the lens aperture, the intensity of your illumination, the camera's exposure time setting, or the camera's gain setting.

3) Possible image distortion

Objects will only appear undistorted in the image if the numbers of binned rows and columns are equal. With all other combinations, objects will appear distorted. For example, if you combine vertical Binning by 2 with horizontal Binning by 4, the target objects will appear squashed.

4) Mutually exclusive with Decimation

Binning and Decimation cannot be used simultaneously in the same direction. When the horizontal Binning value is set to a value other than 1, the horizontal Decimation feature cannot be used. When the vertical

Binning value is set to a value other than 1, the vertical Decimation feature cannot be used.

Vertical binning is not available for models associated with MARS-2621/2622.

8.3.12. Decimation

The Decimation can reduce the number of sensor pixel columns or rows that are transmitted by the camera, reducing the amount of data that needs to be transferred, reducing bandwidth usage, and increasing the frame rate.

- **How Vertical Decimation Works**

On mono cameras, if you specify a vertical Decimation factor of n, the camera transmits only every n^{th} row. For example, when you specify a vertical Decimation factor of 2, the camera skips row 1, transmits row 2, skips row 3, and so on.

On color cameras, if you specify a vertical Decimation factor of n, the camera transmits only every n^{th} pair of rows. For example, when you specify a vertical Decimation factor of 2, the camera skips rows 1 and 2, transmits rows 3 and 4, skips rows 5 and 6, and so on.

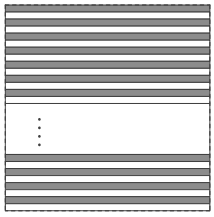

Figure 8-42 Mono camera vertical Decimation

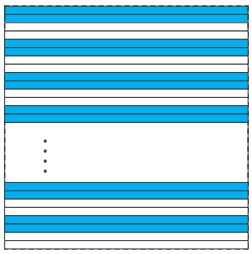

Figure 8-43 Color camera vertical Decimation

As a result, the image height is reduced. For example, enabling vertical Decimation by 2 halves the image height. The camera automatically adjusts the image ROI settings.

Vertical Decimation significantly increases the camera's frame rate.

- **How Horizontal Decimation Works**

On mono cameras, if you specify a horizontal Decimation factor of n, the camera transmits only every n^{th} column. For example, if specify set a horizontal Decimation factor of 2, the camera skips column 1, transmits column 2, skips column 3, and so on.

On color cameras, if you specify a horizontal Decimation factor of n, the camera transmits only every n^{th} pair of columns. For example, if you specify a horizontal Decimation factor of 2, the camera skips columns 1 and 2, transmits columns 3 and 4, skips columns 5 and 6, and so on.

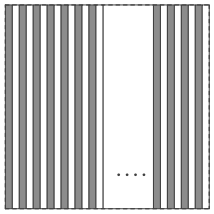

Figure 8-44 Mono camera horizontal Decimation

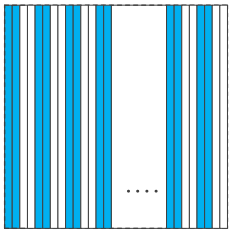

Figure 8-45 Color camera horizontal Decimation

As a result, the image width is reduced. For example, enabling horizontal Decimation by 2 halves the image width. The camera automatically adjusts the image ROI settings.

Horizontal Decimation does not (or only to a very small extent) increase the camera's frame rate.

- **Configuring Decimation**

To configure vertical Decimation, enter a value for the DecimationVertical parameter. To configure horizontal Decimation, enter a value for the DecimationHorizontal parameter.

The value of the parameters defines the Decimation factor. Depending on your camera model, the following values are available:

1: Disable Decimation.

2: Enable Decimation.

- **Considerations When Using Decimation**

1) Effect on ROI settings

The ROI feature and the Decimation feature cannot be used simultaneously. Taking MARS-2621-42GTM/C as an example, the camera's default resolution is 5120×5120. Regardless of the camera's ROI settings, when horizontal Decimation by 2 and vertical Decimation by 2 are enabled, the ROI size would be fixed to 2560×2560, which is the result of enable Decimation under the default resolution, and the ROI cannot be set at this time. When horizontal Decimation by 1 and vertical Decimation by 1 are enabled, the effective resolution of the sensor is restored to 5120×5120.

2) Simultaneous horizontal Decimation and vertical Decimation settings

Horizontal Decimation and vertical Decimation cannot be set separately. When one of them is modified, the other will change to the same value. That is, you can only set horizontal Decimation and vertical Decimation to ON or OFF at the same time.

3) Reduced resolution

Using Decimation effectively reduces the resolution of the camera’s imaging sensor. Taking MARS-2621-42GTM/C as an example, the camera's default resolution is 5120×5120. When horizontal Decimation by 2 and vertical Decimation by 2 are enabled, the effective resolution of the sensor is reduced to 2560×2560.

4) Possible image distortion

The displayed image will not be distorted if the vertical and horizontal Decimation factors are equal. When only horizontal Decimation or vertical Decimation is used, the displayed image will be reduced in width or height.

5) Mutually exclusive with Binning

Decimation and Binning cannot be used simultaneously in the same direction. When the horizontal Decimation value is set to a value other than 1, the horizontal Binning feature cannot be used. When the vertical Decimation value is set to a value other than 1, the vertical Binning feature cannot be used.

8.3.13. Reverse X and Reverse Y

The Reverse X and Reverse Y features can mirror acquired images horizontally, vertically, or both.

- **Enabling Reverse X**

To enable Reverse X, set the **ReverseX** parameter to **true**. The camera mirrors the image horizontally.

Figure 8-46 The original image

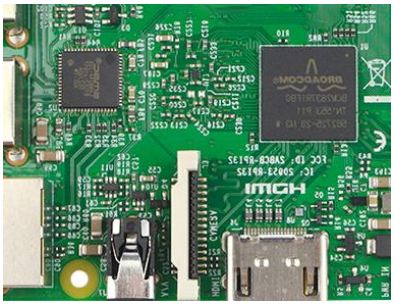

Figure 8-47 Reverse X enabled

- **Enabling Reverse Y**

To enable Reverse Y, set the **ReverseY** parameter to **true**. The camera mirrors the image vertically.

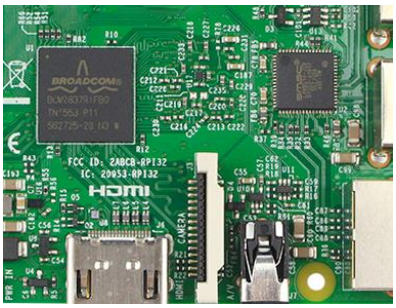

Figure 8-48 The original image

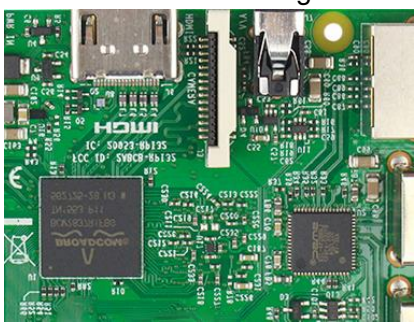

Figure 8-49 Reverse Y enabled

- **Enabling Reverse X and Y**

To enable Reverse X and Y, set the **ReverseX** and **ReverseY** parameters to **true**. The camera mirrors the image horizontally and vertically.

Figure 8-50 The original image

Figure 8-51 Reverse X and Y enabled

- **Using Image ROI with Reverse X or Reverse Y**

If you have specified an image ROI while using Reverse X or Reverse Y, you must bear in mind that the position of the ROI relative to the sensor remains the same. Therefore, the camera acquires different portions of the image depending on whether the Reverse X or the Reverse Y feature are enabled:

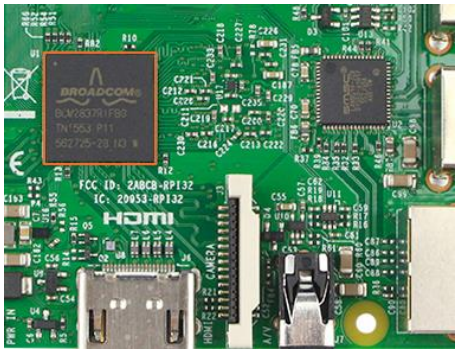

Figure 8-52 The original image

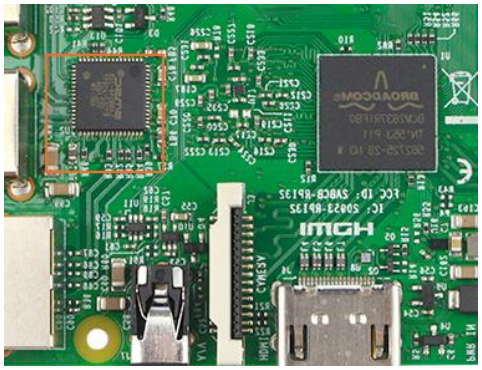

Figure 8-53 Reverse X enabled

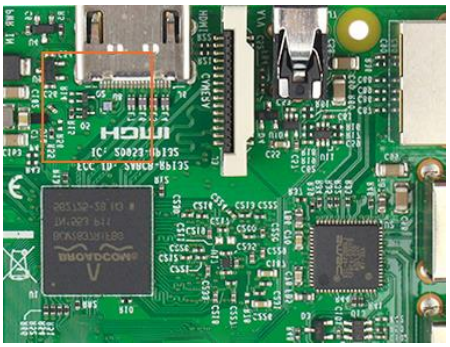

Figure 8-54 Reverse Y enabled

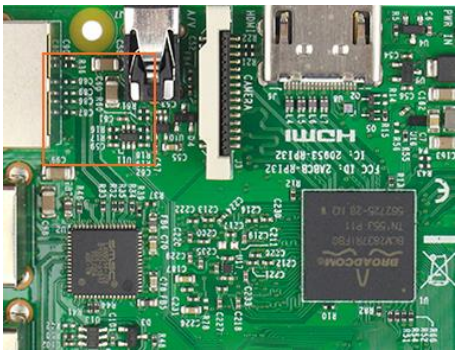

Figure 8-55 Reverse X and Y enabled

- **Pixel Format Alignment**

The alignment of the Bayer format does not change when the camera is using the reverse feature.

8.3.14. Digital Shift

The Digital Shift can multiply the pixel values by 2^n of the images.

This increases the brightness of the image. If your camera doesn't support the digital shift feature, you can use the Gain feature to achieve a similar effect.

- **How Digital Shift Works**

Configuring a digital shift factor of n results in a logical left shift by n on all pixel values. This has the effect of multiplying all pixel values by 2^n.

If the resulting pixel value is greater than the maximum value possible for the current pixel format (e.g., 255 for an 8-bit pixel format, 1023 for a 10-bit pixel format, and 4095 for a 12-bit pixel format), the value is set to the maximum value.

- **Configuring Digital Shift**

To configure the digital shift factor, enter the expected value for the **DigitalShift** parameter.

By default, the parameter is set to 0, i.e., digital shift is disabled. When the **DigitalShift** parameter is set to 1, the camera will shift the pixel value to the left by 1 bit. When the **DigitalShift** parameter is set to 2, the camera will shift the pixel value to the left by 2 bits.

- **Considerations When Using Digital Shift**

Example 1: Digital Shift by 1, 12-bit Image Data

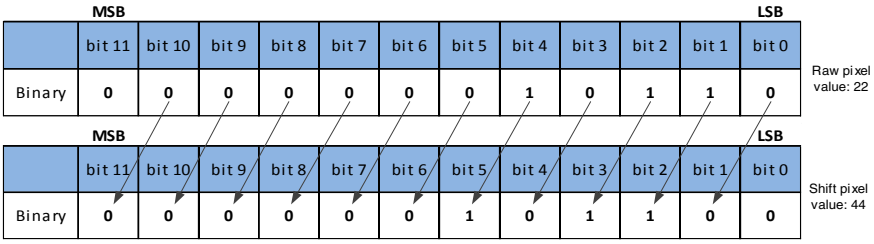

The least significant bit in each 12-bit image data is set to 0.

Example 2: Digital Shift by 2, 8-bit Image Data

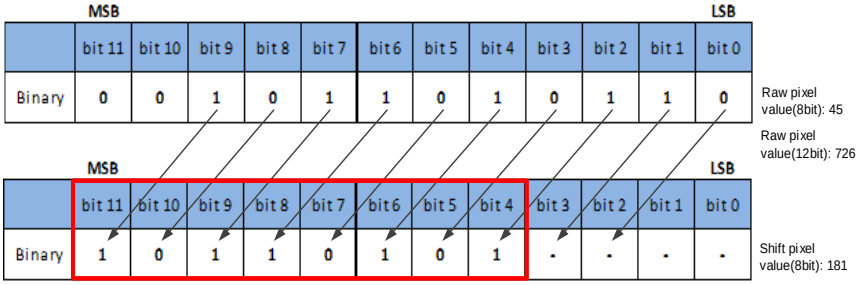

Assume that your camera has a maximum pixel bit depth of 12-bit, but is currently using an 8-bit pixel format. In this case, the camera first performs the digital shift calculation on the 12-bit image data. Then, the camera transmits the 8 most significant bits.

Example 3: Digital Shift by 1, 12-bit Image Data, High Value

Assume that your camera is using a 12-bit pixel format. Also assume that one of your original pixel values is 2839.

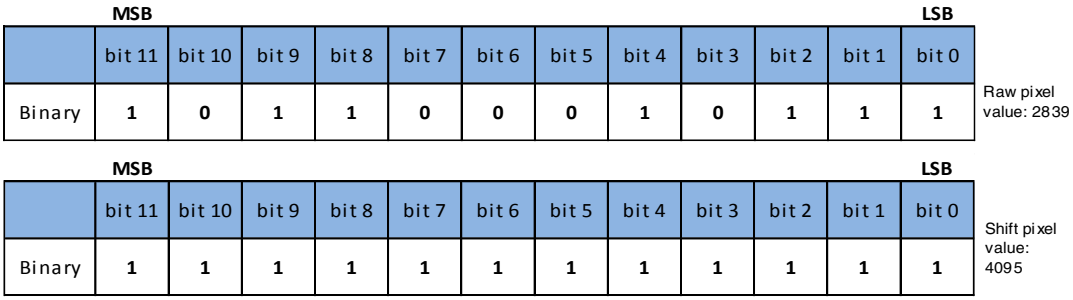

If you apply digital shift by 1 to this pixel value, the resulting value is greater than the maximum possible value for 12-bit pixel formats. In this case, the value is set to the maximum value, i.e., all bits are set to 1.

8.3.15. Acquisition Status

The Acquisition Status feature can determine whether the camera is waiting for trigger signals. This is useful if you want to optimize triggered image acquisition and avoid over triggering.

To determine if the camera is currently waiting for trigger signals:

a) Set the **AcquisitionStatusSelector** parameter to the expected trigger type. Two trigger types are available: **FrameTriggerWait** and **AcquisitionTriggerWait**. For example, if you want to determine if the camera is waiting for **FrameStartTrigger** signals, set the **AcquisitionStatusSelector** to **FrameTriggerWait**. If you want to determine if the camera is waiting for **FrameBurstStartTrigger** signals, set the **AcquisitionStatusSelector** to **AcquisitionTriggerWait**.

b) If the **AcquisitionStatus** parameter is **true**, the camera is waiting for a trigger signal of the trigger type selected. If the **AcquisitionStatus** parameter is **false**, the camera is busy.

8.3.16. Black Level

The Black Level can change the overall brightness of an image by changing the gray values of the pixels by a specified amount. Currently, the application range of the black level value can only be selected as all pixels, and pixel selection is not supported. The lower the black level, the darker the corresponding image, the higher the black level, the brighter the corresponding image.

The automatic black level adjustment has three states: OFF, Once, and Continuous. If it is Once mode, the automatic black level state will automatically change to OFF after adjustment. If it is in Continuous mode, the automatic black level status will not change. When you need to manually adjust the black level, you need to set the automatic black level status to OFF.

8.3.17. Remove Parameter Limits

The range of camera parameters is usually limited, and these factory limits are designed to ensure the best camera performance and high image quality. However, for certain use cases, you may want to specify parameter values outside of the factory limits. You can use the remove parameter limits feature to expand the parameter range. The features of the extended range supported by different cameras may be different and the range may be different, as shown in Table 8-3.

Model	Features	Set the switch to off	Set the switch to on
MARS-170-662GTM/C MARS-280-409GTM/C	Exposure	9~1000000	9~15000000
	Auto Exposure	9~1000000	9~15000000
	Gain	0~24	0~48
	Auto Gain	0~24	0~48
	Black Level	0~4095	0~4095
	Sharpness	0~3	0~63
MARS-321-176GTM-TN-SWIR MARS-533-134GTM-TN-SWIR	Exposure	21~1000000	21~15000000
	Auto Exposure	21~1000000	21~15000000

MARS-533-170GTM-TN-SWIR	Gain	0~24	0~24
	Auto Gain	0~24	0~42
	Black Level	0~24	0~24
	Sharpness	0~3	0~63
MARS-561-207GTM/C(-NF)	Exposure	4~1000000	4~15000000
	Auto Exposure	4~1000000	4~15000000
	Gain	0~16	-2~22
	Auto Gain	0~16	-2~22
	Black Level	-511~512	-511~512
	Sharpness	0~3	0~63
MARS-900-120GTM/C(-NF)	Exposure	4~1000000	4~15000000
	Auto Exposure	4~1000000	4~15000000
	Gain	0~16	0~24
	Auto Gain	0~16	0~24
	Black Level	-1023~1024	-1023~1024
	Sharpness	0~3	0~63
MARS-1261-90GTM/C(-NF)	Exposure	37~1000000	37~15000000
	Auto Exposure	37~1000000	37~15000000
	Gain	0~16	0~24
	Auto Gain	0~16	0~24
	Black Level	-4095~4095	-4095~4095
	Sharpness	0~3	0~63
	White Balance component factor	0~15.998	0~31.998
	Auto White Balance	1~15.998	1~31.998
MARS-1610-52GTM/C(-NF) MARS-2020-42GTM/C(-NF) MARS-2440-35GTM/C(-NF) MARS-2440-35GTM-NF-V	Exposure	3~1000000	3~15000000
	Auto Exposure	3~1000000	3~15000000
	Gain	0~16	0~24
	Auto Gain	0~16	0~24
	Black Level	0~255 (BPP8) 0~1023 (BPP10) 0~4095 (BPP12)	0~255 (BPP8) 0~1023 (BPP10) 0~4095 (BPP12)
	Sharpness	0~3	0~63

© 2026 China Daheng Group, Inc. Beijing Image Vision Technology Branch

	White Balance component factor	0~15.998	0~31.998
	Auto White Balance	1~15.998	1~31.998
MARS-1840-63GTM/C(-NF)	Exposure	10~1000000	10~15000000
	Auto Exposure	10~1000000	10~15000000
	Gain	0~16	0~24
	Auto Gain	0~16	0~24
	Black Level	-1023~1024	-1023~1024
	Sharpness	0~3	0~63
MARS-2621-42GTM/C(-NF) MARS-2622-42GTM/C(-NF) MARS-2621-42GTM/C-S MARS-2622-42GTM/C-S	Exposure	14~1000000	14~15000000
	Auto Exposure	14~1000000	14~15000000
	Gain	0~16	0~24
	Auto Gain	0~16	0~24
	Black Level	-512~1023	-512~1023
	Sharpness	0~3	0~63
	White Balance component factor	0~15.998	0~31.998
	Auto White Balance	1~15.998	1~31.998
MARS-2621-42GTM(-NF)-NIR MARS-2622-42GTM(-NF)-NIR MARS-2621-42GTM-NIR-S MARS-2622-42GTM-NIR-S	Exposure	14~1000000	14~15000000
	Auto Exposure	14~1000000	14~15000000
	Gain	0~16	0~24
	Auto Gain	0~16	0~24
	Black Level	-512~1023	-512~1023
	Sharpness	0~3	0~63
MARS-5000-24GTM/C(-NF/TF) MARS-6500-18GTM/C(-NF/TF) MARS-6501-18GTM/C(-NF/TF)	Exposure	14~1000000	14~15000000
	Auto Exposure	14~1000000	14~15000000
	Gain	0~16	0~24
	Auto Gain	0~16	0~24
	Black Level	-1023~1024	-1023~1024
	Sharpness	0~3	0~63
	White Balance component factor	0~15.998	0~31.998
	Auto White Balance	1~15.998	1~31.998

© 2026 China Daheng Group, Inc. Beijing Image Vision Technology Branch

MARS-6100-18GTM/C-TF	Exposure	34~1000000	34~300000000
	Auto Exposure	34~1000000	34~300000000
	Analogue Gain	0~24	0~36
	Digital Gain	0~16	0~24
	Auto Gain	0~24	0~36
	Black Level	0~4095	0~4095
	Sharpness	0~7	0~63
	White Balance component factor	0~15.998	0~31.998
	Auto White Balance	1~15.998	1~31.998
MARS-15100-6GTM/C-TF	Exposure	60~1000000	60~300000000
	Auto Exposure	60~1000000	60~300000000
	Analogue Gain	0~24	0~36
	Digital Gain	0~16	0~24
	Auto Gain	0~24	0~36
	Black Level	0~4095	0~4095
	Sharpness	0~7	0~63
	White Balance component factor	0~15.998	0~31.998
	Auto White Balance	1~15.998	1~31.998

Table 8-3 Parameter range of features supported before and after Remove Parameter Limits

8.3.18. User Data Area

The user data area is a FLASH data area reserved for the user, and the user can use the area to save algorithm factors, parameter configurations, etc. The data is saved to the camera flash area immediately after being written, and the data will not disappear after the camera is powered off.

There are two type of user data area interfaces supported (The user may determine this by checking the related function code of the camera).

Type 1: Divided into 4 × 4K bytes data fields.

Function	Data Type	Supported Scope
DataFieldSelector	Enum	DataField_0 DataField_1 DataField_2 DataField_3
DataFieldValue[DataFieldSelector]	Register	R/W range: 4K bytes

User Interface Usage Example:

//The user needs to store 4K of content in the first data field.

DataFieldSelector = DataField_0

Call the API for writing to write 4K bytes of data into the DataFieldValue.

//The user needs to read the 4K content of the second data field.

DataFieldSelector = DataField_1

Call the API for reading to read 4K bytes of data from the DataFieldValue.

Type 2: Total of 1 x 512KB data field.

Function	Data Type	Supported Scope
DataFieldValueAll	Register	R/W range: 512K bytes

User Interface Usage Example:

//The user needs to store 512K of content in the data field.

Call the API for writing to write 512K bytes of data into the DataFieldValue.

//The user needs to read the 512K content of the data field.

Call the API for reading to read 512K bytes of data from the DataFieldValue.

8.3.19. Timer

The camera only supports one timer (Timer1), which can be started by a specified event or signal (only ExposureStart signal is supported). The timer can configure a timer output signal that goes high on a specific event or signal and goes low after a specific duration. After a trigger source event that starts the TimerTrigger Source occurs, it starts to delay for a specified time. When the delay has expired, the timer output signal is enabled and stays high for the duration. When the duration has expired, the timer output signal is disabled and goes low, and the timer is cleared at the same time. A schematic diagram of the timer working process is as follows:

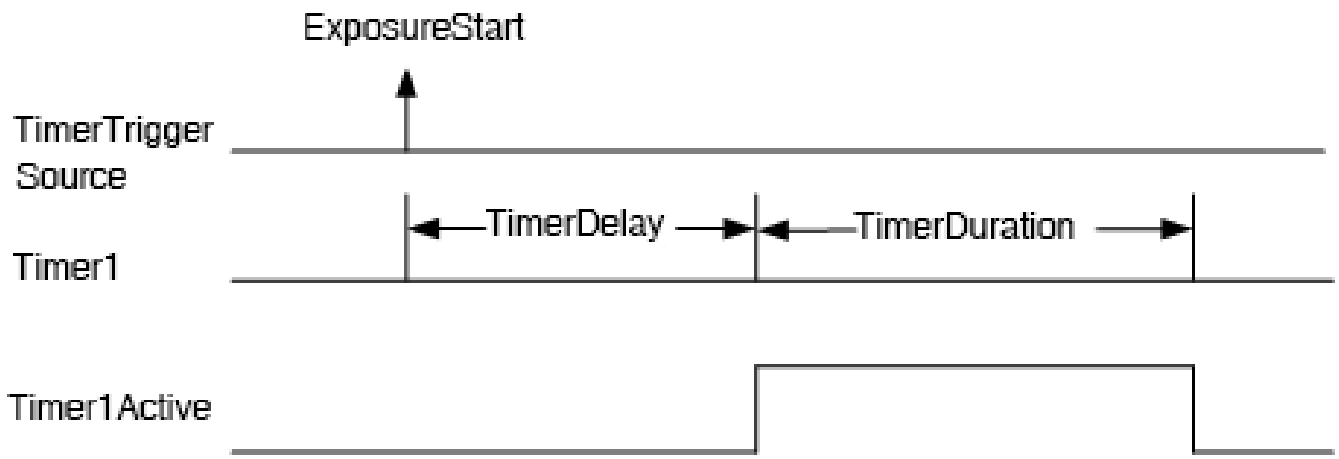

Figure 8-56 The schematic diagram of Timer1Active

The timer configuration process is as follows:

1. Set TimerSelector, currently only Timer1 supported.
2. Set LineSelector.
3. Set the LineSource to Timer1Active.
4. Set TimerTriggerSource, currently only ExposureStart supported.
5. Set TimerDelay, the range of TimerDelay is [0, 16777215], the unit is μs.
6. Set TimerDuration, the range of TimerDuration is [0, 16777215], the unit is μs.

   1) From the start of the timer to the full output of Timer1Active, this process will not be interrupted by the ExposureStart signal, and Timer1Active must be completely output to start timing according to the next ExposureStart signal. As shown in theFigure 8-57, the red ExposureStart signals are ignored.

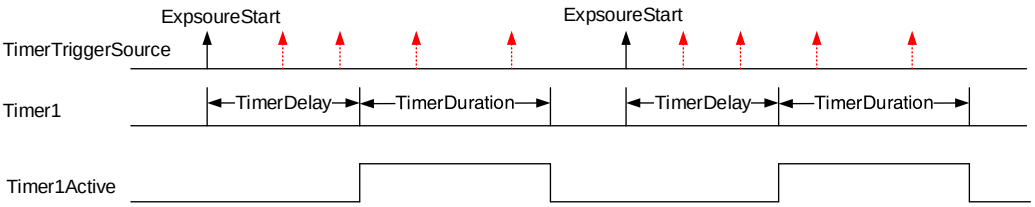

Figure 8-57 The relationship between Timer1Active and the ExposureStart signal

   2) After the acquisition is stopped, the timer is immediately cleared and the Timer1Active signal goes low immediately.

8.3.20. Counter

The camera only supports one counter (Counter1), which can count the number of FrameTrigger, AcquisitionTrigger and FrameStart signals received by the camera. The counter starts counting from 0. You can select one of the above three signals to count by CounterEventSource. The FrameTrigger and AcquisitionTrigger signals of the counter statistics refer to the signals that have been triggered for filtering without a trigger delay.

If CounterValue is enabled, the statistical data can be inserted into the frame information and output with the image.

The counter can be reset by an external signal. The reset source is selected by CounterResetSource. Currently, the CounterResetSource option supports Off, SoftWare, Line0, Line2. Among them, Off means no reset, SoftWare means software reset, Line0, Line2 means reset through IO interface input signal. The polarity of the reset signal only supports RisingEdge, which means reset the Counter on the rising edge of the reset signal.

Counter configuration:

1. Set CounterSelector, currently only Counter1 supported.
2. Set CounterEventSource, the values that can be set are FrameStart, FrameTrigger, AcquisitionTrigger.

3. Set CounterResetSource, the values that can be set are Off, SoftWare, Line0, Line2.
4. Set CounterResetActivation, currently only RisingEdge supported.

1) After the acquisition is stopped, the Counter continues to work, will not be cleared, and it will be cleared when the camera is powered off.
2) CounterReset is used to software reset the counter.

8.4. Image Processing

8.4.1. Hot Pixel Correction

Hot pixels are pixels that cannot react to light or incident light. The saturation, sensitivity, noise, and other characteristics of hot pixels are different from normal pixels, usually related to prolonged exposure, high gain settings, or sensors at high temperatures.

The hot pixel correction function can dynamically correct defect pixels through adjacent pixels without prior calibration. In scenarios where the camera is exposed to high temperatures, high gain, and other factors that can generate more hot pixels, it is recommended to turn on the hot pixel correction function to improve image quality. This function is disabled by default.

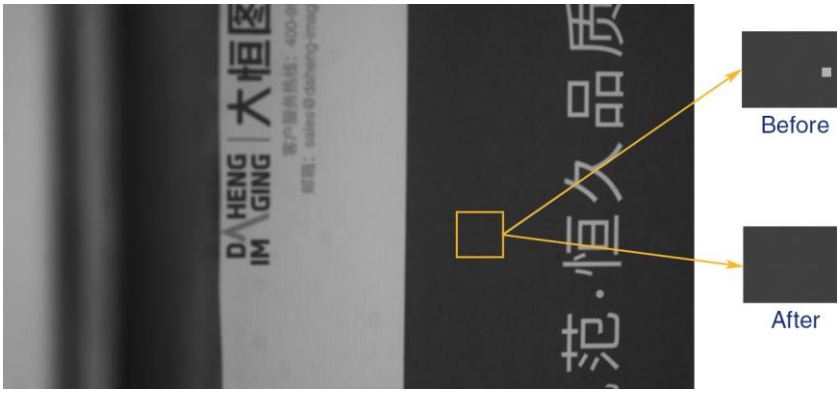

Figure 8-58 Hot pixel correction effect

8.4.2. Static Defect Pixel Correction

Due to the technical defects of the image sensor, the camera has more or less defect pixels. Some of these defect pixels are fixed at the same gray value and do not change with the scene, which are called dead pixels. While some pixels may appear significantly brighter or darker than the rest, resulting in a significant difference between the gray value and the surrounding pixels, which is called noise.

Bright field calibration, which uses the difference of the average grayscale value of the entire image and the grayscale value of each pixel. If the difference value is higher than the threshold set by the user, it is determined as a dead pixel and is suitable for scenes with relatively uniform grayscale values image. In actual scenarios, the difference between the current pixel and neighbor pixels compare with the threshold, if the difference value is greater than the threshold, it is determined as noise.

Static defect pixel correction requires a new image, click auto-tagging to obtain the coordinates of the noise (defect pixels). When the number of the noise is less than or equal to 8192, click Save to Device for

defect pixel correction (hardware correction). At this time, the coordinate information of the calibrated noise will be saved in the camera and these pixels will be corrected. When the number of the noise exceeds 8192, static defect pixel correction is performed on the software side when clicking auto-tagging. In this case, the coordinates of the marked pixels cannot be saved to the device, and when the noise exceeds 500000, it cannot be saved to the file. When there are fewer noises and their positions are relatively fixed, it is suitable to enable the static defect pixel correction function, which is enabled by default.

Before bright field correction

After bright field correction

Figure 8-59 Bright field correction effect

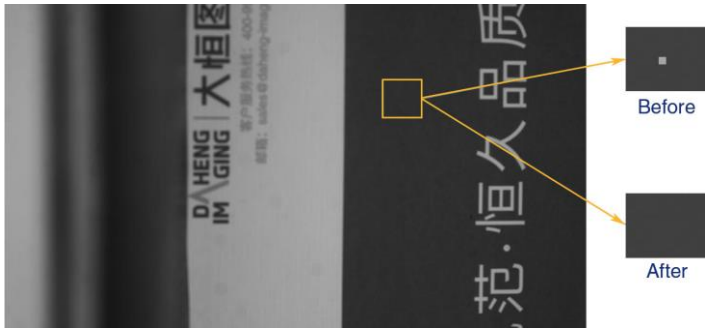

Figure 8-60 Defect pixel correction effect in actual scenario

Please use static defect pixel correction function in full screen mode for calibration.

8.4.3. Light Source Preset

The MARS 10GigE series camera supports light source preset function, and provides Off mode, Custom mode, and four specified common color temperature light source modes. The camera provides the corresponding white balance coefficient and color transformation coefficient in the four specified color temperature light source modes.

- **Off Mode**

The camera does not perform white balance and color conversion processing on the image by default.

- **Custom Mode**

The camera does not perform white balance and color conversion processing on the image by default.

Users can perform automatic white balance, or manually input white balance coefficients, and it supports color conversion enable control and manually input color conversion coefficients.

- **Daylight-6500K**

When the user selects **Daylight-6500K** in the light source preset, the camera will perform white balance processing on the image by default. If the external environment light source used is D65 light source, the image will not produce color deviation.

Even if the current light source is selected as the light source preset, users can also manually adjust the white balance coefficient.

Users can turn on the color conversion enable switch and calibrate according to the color conversion coefficient of the **Daylight-6500K** light source (manual input of color correction coefficients is not supported).

The option operation of **Daylight5000K**, **CoolWhiteFluorescence**, **INCA** is the same as **Daylight-6500K**.

8.4.4. Auto White Balance

8.4.4.1. Auto White Balance ROI

Auto White Balance feature use the image data from AWBROI to calculate the white balance ratio, and then balance ratio is used to adjust the components of the image.

ROI is defined in the following way:

AWBROIOffsetX:	The offset of the X axis direction.
AWBROIOffsetY:	The offset of the Y axis direction.
AWBROIWidth:	The width of ROI.
AWBROIHeight:	The height of ROI.

Offset is the offset value that relative to the upper left corner of the image. Where the step length of X axis direction offset and width is 4, the step length of Y axis direction offset and height is 2. The ROI setting depends on the current image and cannot exceed the current image range. Assuming the current image width is Width, the image height is Height, then the ROI setting need to meet the following condition 2:

$$AWBROIWidth + AWBROIOffsetX \leq Width$$
$$AWBROIHeight + AWBROIOffsetY \leq Height$$

If condition 2 is not met, the user cannot set the ROI.

The default value of ROI is the entire image, you can set the "white dot" area (ROI) according to your need. Where the minimum value of AWBROIWidth can be set is 16, the maximum value is equal to the current image width. The minimum value of AWBROIHeight can be set is 16, the maximum value is equal to the current image height, they are all need to meet the condition 2.

Assuming the current image width is 1024, the height is 1000, and then the "white dot" area ROI setting is:

AWBROIOffsetX＝100

AWBROIOffsetY＝50

AWBROIWidth＝640

AWBROIHeight＝480

The relative position of the ROI and the image is shown in Figure 8-61.

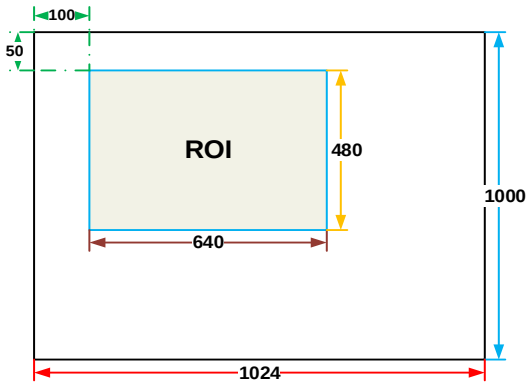

Figure 8-61 An example for the relative position between the ROI and the current image

8.4.4.2. Auto White Balance Adjustment

The auto white balance can be set to "Once" or "Continuous" mode. When using the "Once" mode, the camera just adjusts the white balance ratio only once, when using the "Continuous" mode, the camera continuously adjusts the white balance ratio based on the data in AWBROI.

The auto white balance feature can also select the color temperature. When the color temperature of the selection is "Adaptive", the data in ROI always adjusting the red, green and blue to the same. When selecting the specific color temperature, the camera adjusts the factor according to the light source, so that the hue of the ROI is the same as the hue of the light source. That is: high temperature is cold, low color temperature is warm.

The auto white balance feature is only available on color sensors.

8.4.5. Color Transformation Control

The Color Transformation is used to correct the color information delivered by the sensor, improve the color reproduction of the camera, and make the image closer to the human visual perception.

Figure 8-62 Color template

The user can use a color template containing 24 colors and shoot this color template with a camera, the RGB value of each color may be different from the standard RGB value of the standard color template, the vendor can use the software or hardware to convert the RGB value that is read to the standard RGB value. Because the color space is continuous, all the other RGB values that are read can be converted to the standard RGB values by using the mapping table created by the 24 colors.

1) Prerequisites

For the color transformation to work properly, the white balance must first be configured appropriately.

2) Configuring color transformation

- **Camera which not support light source preset function**

There are two modes for configuring color transformation: default mode (RGBtoRGB), user-defined mode (User).

RGBtoRGB: Default color transformation parameters provided to the camera when it leaves the factory.

User:

a) Set the **ColorTransformationValueSelector** parameter to the expected position in the matrix, e.g., Gain00.

b) Enter the expected value for the **ColorTransformationValue** parameter to adjust the value at the selected position. The parameter's value range is -4.0 to +4.0.

Color conversion: It enabled when set to **true**.

- **Camera which support light source preset function**

There are only default mode (RGBtoRGB) for configuring color transformation.

Custom:

a) Set the **ColorTransformationValueSelector** parameter to the expected position in the matrix, e.g., Gain00.

b) Enter the expected value for the **ColorTransformationValue** parameter to adjust the value at the selected position. The parameter's value range is -4.0 to +4.0.

Color conversion: It enabled when set to **true**.

In User/Custom mode, the user can input the color transformation value according to the actual situation to achieve the color transformation effect.

3) How it works

The color transformation feature uses a transformation matrix to deliver modified red, green, and blue pixel data for each pixel.

The transformation is performed by premultiplying a 3 x 1 matrix containing R, G, and B pixel values by a 3 x 3 matrix containing the color transformation values:

$$\begin{bmatrix} Gain00 & Gain01 & Gain02 \\ Gain10 & Gain11 & Gain12 \\ Gain20 & Gain21 & Gain22 \end{bmatrix} \begin{bmatrix} R \\ G \\ B \end{bmatrix} = \begin{bmatrix} R' \\ G' \\ B' \end{bmatrix}$$

4) Effect images

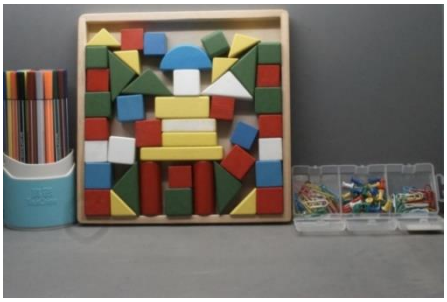

Figure 8-63 Before color transformation

Figure 8-64 After color transformation

8.4.6. Saturation

The MARS 10GigE series camera supports saturation function. Saturation function can changes the colorfulness (intensity) of the colors to achieve the goal image effect.

1) Prerequisites

If the **SaturationEnable** parameter is available, it must be set to **On**.

2) Configuring saturation

Enter the expected value for the Saturation parameter and the range is 0 to 128. By default, the parameter is set to 64 (no saturation perform)

3) How it works

The saturation adjustment is performed by a 3 × 3 matrix. When the saturation intensity is modified, the saturation can be changed by modifying the adjustment matrix A.

$$\begin{bmatrix} R_{out} \\ G_{out} \\ B_{out} \end{bmatrix} = \begin{bmatrix} RR & GR & BR \\ RG & GG & BG \\ RB & GB & BB \end{bmatrix} \begin{bmatrix} R_{in} \\ G_{in} \\ B_{in} \end{bmatrix} + \begin{bmatrix} R_{offset} \\ G_{offset} \\ B_{offset} \end{bmatrix} \quad A = \begin{bmatrix} RR & GR & BR \\ RG & GG & BG \\ RB & GB & BB \end{bmatrix}$$

Saturation adjustment and color correction adjustment both adopt the form of a matrix, so the saturation is adjusted at the same time after color correction is enabled.

4) Effect images

Figure 8-65 Before saturation

Figure 8-66 After saturation

8.4.7. Gamma

The Gamma can optimize the brightness of acquired images for display on a monitor.

1) Prerequisites

If the **GammaEnable** parameter is available, it must be set to **true**.

2) How it works

The camera applies a Gamma correction value (γ) to the brightness value of each pixel according to the following formula (red pixel value ® of a color camera shown as an example):

$$R_{corrected}=\left(\frac{R_{uncorrected}}{R_{max}}\right)^{\gamma}\times R_{max}$$

The maximum pixel value (R_{max}) equals, e.g., 255 for 8-bit pixel formats or 4095 for 12-bit pixel formats.

3) Enabling Gamma correction

To enable Gamma correction, use the **GammaValue** parameter. The **GammaValue** parameter's range is 0 to 4.00.

a) Gamma = 1.0: the overall brightness remains unchanged.

b) Gamma < 1.0: the overall brightness increases.

c) Gamma > 1.0: the overall brightness decreases.

In all cases, black pixels (gray value = 0) and white pixels (gray value = maximum) will not be adjusted.

If you enable Gamma correction and the pixel format is set to 12-bit pixel format, some image information will be lost. Pixel data output will still be 12-bit, but the pixel values will be interpolated during the Gamma correction process, resulting in loss of accuracy and loss of image information. If the Gamma feature is required and no image information is lost, please avoid using the Gamma feature in 12-bit pixel format.

4) Additional parameters

Depending on your camera model, the following additional parameters are available:

a) GammaEnable: Enables or disables Gamma correction.

b) GammaMode: You can select one of the following Gamma correction modes:

User: The Gamma correction value can be set as expected.

sRGB: The camera's internal default Gamma correction value. This feature is used with the color transformation feature to convert images from RGB to sRGB. It is recommended to adjust Gamma to sRGB mode after enabling the color transformation feature.

8.4.8. Sharpness

The sharpness algorithm integrated in the camera can significantly improve the definition of the edges of the image. The higher the definition, the clearer the contour corresponding to the image. This feature can improve the accuracy of image analysis, thus improving the recognition rate of edge detection and OCR.

- Enable sharpness

ON means that the sharpness feature is enabled.

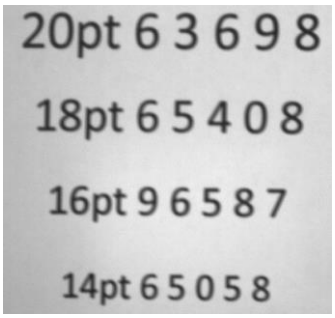

Figure 8-67 Before sharpness adjustment

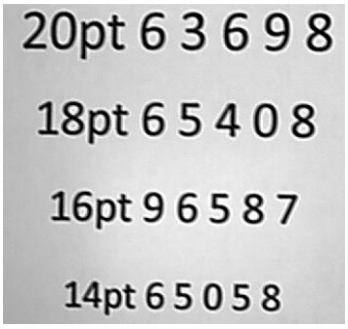

Figure 8-68 After sharpness adjustment

- Sharpness adjustment

Adjust the sharpness value to adjust the camera's sharpness to the image. The adjustment range is 0-3.0. The larger the value, the higher the sharpness.

8.4.9. Flat Field Correction

During the use of the camera, there may be various inconsistencies in the image, which are mainly reflected in the following aspects:

1) Inconsistent response of individual pixels.

2) The difference in gray value between the image center and the edge.

3) Non-uniform illumination.

The Flat Field Correction (FFC) feature can correct the inconsistency of the image. As shown below, the FFC can adjust the pixel values of different positions to the same gray value.

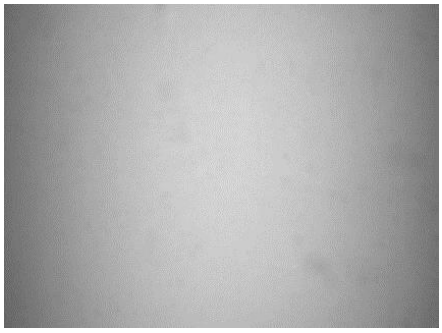

Figure 8-69 Before FFC

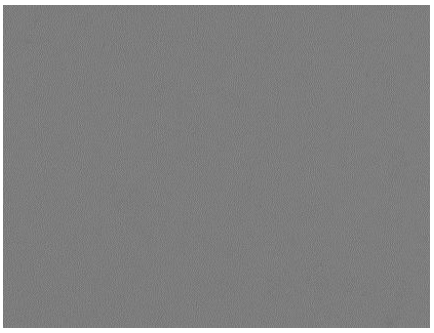

Figure 8-70 After FFC

8.4.9.1. Scenario Explanation

Depending on the generation location and usage location of the FFC coefficient, users can choose from the following combination usage scenarios:

	FFC Coefficient Generation	FFC Coefficient Usage	Camera Requirements
Scenario 1	PC	PC	Suitable for all cameras
Scenario 2	PC	Camera	Suitable for certain cameras
Scenario 3	Camera	Camera	Suitable for certain cameras

Based on the requirements and advantages and disadvantages of the camera, explain these scenarios as follows:

	Camera Requirements	Advantages	Disadvantages
Scenario 1	There are no requirements for the camera model in this scenario, as it is software-implemented FFC. Users first need to calculate to generate FFC coefficient using FFC plugin or the FFC interface in the DxImageProc library on the PC. Then it is applied to each frame of captured images on the PC.	No camera requirements, suitable for all cameras. The FFC algorithm is a pixel-by-pixel FFC algorithm.	Each frame needs to perform FFC on the PC, which consume CPU resources of the PC.
Scenario 2	There are specific requirements for the camera in this scenario. The method for determining whether a camera is suitable for this scenario is that the camera must support **ShadingCorrectionMode**, and the value read must be **FlatFieldCorrection** or **TailorFlatFieldCorrection**. Users first need to calculate to generate FFC coefficient using FFC plugin or the FFC interface in the DxImageProc library on the PC and then import it into the camera **FFCValueAll**. Then enable the FFC function by setting **FlatFieldCorrection=On**. Afterwards the camera will output images that have undergone FFC in collection status.	Compared to the Scenario 1, it is not necessary to perform FFC for every frame on the PC, CPU resources are saved.	It is still necessary to generate the FFC coefficient on the PC and then import it into the camera, which makes the process cumbersome.
Scenario 3	There are specific requirements for the camera in this scenario. The method for determining whether a camera is suitable for this scenario is that the camera must support **ShadingCorrectionMode**, and the value read must be **DeviceFlatFieldCorrection**. Users only need to send the **FFCGenerate** command to the camera in collection status to generate FFC coefficient internally. Then enable the FFC function by setting **FlatFieldCorrection=On**.	Compared to the Scenario 1, CPU resources are saved. Compared to the Scenario 2, the FFC coefficient can be generated in the camera, which make it easier to use.	

	Afterwards the camera will output images that have undergone FFC.		

8.4.9.2. Flat Field Correction Plugin

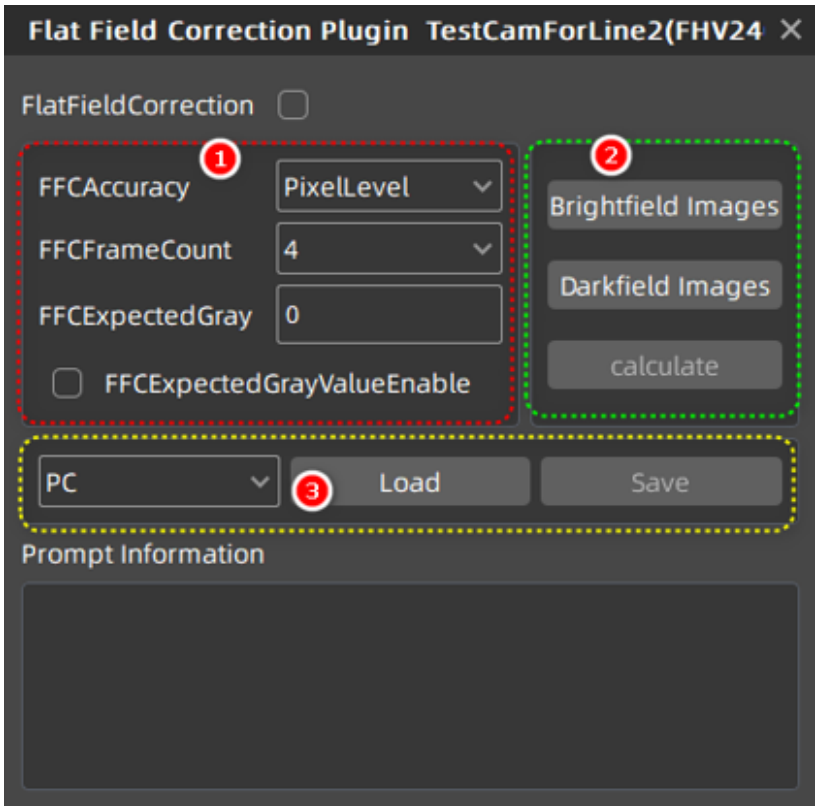

Figure 8-71 FFC Plugin

Red area: Configurable parameters before performing FFC calculations.

Green area: Image acquisition and FFC coefficient calculations.

Yellow area: Loading and storing FFC coefficients.

UI Function	Scenario 1	Scenario 2	Scenario 3
FlatFieldCorrection	Control whether to perform FFC on the current image.	Control the switch for the FFC function.	
FFCCoefficientsSelection	Not Supported		Support multiple sets.
FFCAccuracy	PixelLevel	BlockLevel	BlockLevel,PixelLevel
FFCFrameCount	Recommended value: 4. Optional range: 1, 2, 4, 8, 16. If the image noise is significant, it is recommended to select a larger value.		
FFCExpectedGray	The expected gray value of the image after FFC.		
FFCExpectedGrayValueEnable	Ture: **FFCExpectedGray** set by the user is valued.		

	False: The algorithm automatically calculates the appropriate gray value.		
Brightfield Images	Must.	Must.	Not necessary.
Darkfield Images	Optional.	Optional.	Not necessary.
calculate	Call the API interface to generate FFC coefficients for use in the plugin.	Call the API interface to generate FFC coefficient, and set it to the runtime memory of the camera.	Send the command to the camera to calculate FFC coefficient.
PC: Load	Load local FFC coefficient files (*.ffc) to the FFC plugin for use.	Load local FFC coefficient files (*.ffc) to the runtime memory of the camera.	
PC: Save	Save the FFC coefficient calculated by the FFC plugin to the current *.ffc file.	Save the FFC coefficient from the runtime memory of the camera to the local FFC coefficient files (*.ffc).	
Device: Load	Not Supported	Load the FFC coefficient from the non-volatile memory chip to the runtime memory of the camera.	
Device: Save	Not Supported	Save the FFC coefficient from the runtime memory to the non-volatile memory chip of the camera.	

8.4.9.3. FFC Function Attribute Table

Attribute name	Type	Function description
ShadingCorrectionMode	Enum	RO attribute. It is used to distinguish which scenario the camera belongs to.
FlatFieldCorrection	Enum	RW attribute. It controls the switch for FFC function.
FFCAccuracy	Enum	RW attribute. BlockLevel means block-level precision, PixelLevel means pixel-level precision.
FFCBlockSize	Enum	RO attribute. It indicates the specific algorithm version currently used by the camera.
FFCCoefficientsSize	Int	RO attribute. It indicates the size of the FFC coefficient, unit byte.
FFCFrameCount	Enum	RW attribute. It represents the number of frames fused in the input image used to calculate FFC.
FFCCoefficient	Enum	RW attribute. It indicates the number of sets currently supported by the camera for FFC coefficient.
FFCFlashSave	Command	WO attribute. Send a command to save the FFC coefficient in the camera's runtime memory to the non-volatile storage chip inside the camera.

© 2026 China Daheng Group, Inc. Beijing Image Vision Technology Branch

FFCFlashLoad	Command	WO attribute. Send a command to load the FFC coefficient stored in the camera's non-volatile memory chip to the camera's runtime memory.
FFCFlashDataStatus	Enum	RO attribute. Available means that the FFC coefficient stored in the camera's non-volatile memory chip is valid. Unavailable means that the FFC coefficient stored in the camera's non-volatile memory chip is invalid.
FFCValueAll	Buffer	RW attribute. User interface for reading and writing camera FFC coefficients.
FFCDDRDataStatus	Enum	RO attribute. Available means that the FFC coefficient stored in the camera's runtime memory is valid. Unavailable means that the FFC coefficient stored in the camera's runtime memory is invalid.
FFCGenerate	Command	WO attribute. Send a command to start calculating the FFC coefficient inside the camera.
FFCGenerateStatus	Enum	RO attribute. Idle means that the camera is not performing FFC. WaitingImage means that the camera has started FFC but has not yet completed it.
FFCExpectedGrayValueEnable	Enum	RW attribute. On means that FFCExpectedGray is enabled, and the effect of FFC is based on the FFCExpectedGray value user-input. Off means that FFCExpectedGray is disabled, and the algorithm automatically calculates the appropriate gray value.
FFCExpectedGray	Int	RW attribute. User interface for reading and writing FFC expected gray value.
FFCROIWidth	Int	RW attribute. After setting the FFC region of interest, the FFC coefficient is still calibrated using the full-resolution image, but it is calculated based on the brightest area in the FFC region of interest. In other words, the FFC effect is to adjust the brightness of the entire image to match the brightest area in the FFC region of interest, rather than the brightest area in the entire image.
FFCROIHeight	Int	
FFCROIOffsetX	Int	
FFCROIOffsetY	Int	

8.4.9.4. API Interface

See the sample program for details:

Programming Interface	Sample Program Path
C	GalaxySDK\Development\Samples\VC\GxFlatFieldCorrection
C++	GalaxySDK\Development\Samples\C++\GxFlatFieldCorrection
C#	GalaxySDK\Development\Samples\CSharp\x64\GxFlatFieldCorrection
Python	GalaxySDK\Development\Samples\Python\GxFlatFieldCorrection

8.4.9.5. Important Notes

- Requirements for capturing bright-field images: It is recommended to align the camera with a blank paper or a flat light source (ensuring consistent light intake across different areas of the sensor).

Adjust the distance between the camera and the blank paper / flat light source so that it fills the entire field of view. The image should not be overexposed, the gray value of the brightest area in the bright field should be less than 250. The image should not be underexposed, the gray value of the darkest area in the bright field should be greater than 20. It is recommended to control the gray value of the bright field by adjusting the exposure time or light source, rather than adjusting the aperture.

- After performing FFC calibration, the FFC coefficient needs to be recalculated in the following situations:

User action	Scenario 1	Scenario 2	Scenario 3
Replace lens.	Needs recalibration.	Needs recalibration.	Needs recalibration.
Modify Gain.	Needs recalibration.	Needs recalibration.	Needs recalibration.
Modify ROI.	Needs recalibration.	Needs recalibration.	No recalibration required.
Modify Binning.	Needs recalibration.	Needs recalibration.	No recalibration required.
Modify Decimation.	Needs recalibration.	Needs recalibration.	No recalibration required.
Modify ReverseX.	Needs recalibration.	Needs recalibration.	No recalibration required.
Modify ReverseY.	Needs recalibration.	Needs recalibration.	No recalibration required.

- When FFCAccuracy is set to PixelLevel, the following precautions should be taken:

1) When FFCAccuracy is set to PixelLevel, the frame rate may be lower than when set it to BlockLevel.
2) When FFCAccuracy is set to PixelLevel, if the FFC function is enabled, the camera will stop FFC function during the process of saving FFC parameters to the PC or loading FFC parameters from the PC to the camera and it will be resumed after the parameters have been saved or loaded.
3) When FFCAccuracy is set to PixelLevel, the camera will stop outputting images during FFC calibration, and it will be resumed after calibration is complete.
4) When FFCAccuracy is set to PixelLevel, if the camera is in calibration mode and the FFC function is enabled, the camera will stop the FFC function and it will be resumed after calibration is complete.
5) When FFCAccuracy is set to PixelLevel, once calibration begins, it will continue until the camera has captured a sufficient number of frames. For example, if the number of frames for calibration is set to 16 and the camera is currently in trigger mode, but the user only triggers 4 frames, the camera will remain in a state of waiting for the remaining 12 frames. Even stopping the acquisition will not exit this state.
6) When loading FFC parameters from a PC to the camera, the camera will verify the data length. If the data length is insufficient, the parameter loading cannot be completed, and the camera will remain in the loading state. Even stopping the acquisition will not exit this state.

8.4.10. Lookup Table

When the analog signal that is read out by the sensor has been converted via ADC, generally, the raw data bit depth is larger than 8 bits, it is 12 bits. The feature of lookup table is to replace some pixel values in the 8 bits and 12 bits images by values defined by the user.

The lookup table can be a linear lookup table or a non-linear lookup table, created entirely by the user.

You can also use the **LUTValueAll** function to create an entire lookup table.

1) How it works

a) LUT is short for “lookup table”, which is basically an indexed list of numbers.

b) In the lookup table you can define replacement values for individual pixel values. For example, you can replace a gray value of 0 (= minimum gray value) by a gray value of 4095 (= maximum gray value for 12-bit pixel formats). This changes all completely black pixels in your images to completely white pixels.

c) Setting a user-defined LUT can optimize the luminance of images. By defining the replacement values in advance and storing them in the camera to avoid time-consuming calculations. The camera itself has a factory default lookup table, and the default lookup tables do not affect image luminance.

2) Creating the user-defined LUT

To create a lookup table, you need to determine the range of **LUTIndex** and **LUTValue** parameters by the maximum pixel format supported by the currently used camera.

- On cameras with a maximum pixel bit depth of 12 bits

The **LUTIndex** selectable item is 0-4095, each **LUTIndex** corresponds to a **LUTValue**, and the **LUTValue** range is [0,4095].

Create a user-defined lookup table with the following steps:

1) Select the lookup table to use. Since there is only one user-defined lookup table in the camera, there is no need to select it by default.

2) Set the **LUTIndex** parameter to the pixel value that you want to replace with a new value.

3) Set the **LUTValue** parameter to the new pixel value.

4) Repeat steps 1 and 2 for all pixel values that need to be changed to set the parameters to the target pixel values in turn.

5) Set the **LUTEnable** parameter to **true** means that the lookup table feature is enabled. The default is disabled.

If you want to replace all pixel values, it is recommended to use the **LUTValueAll** function. See the **LUTValueAll** sample code in the Development User Manual for details.

8.4.11. Noise Reduction

Digital images are often interfered by the noise of imaging equipment and external environment during the process of digitization and transmission, which will generate noise contained images. The process of reducing or suppressing noise in digital images is called image noise reduction.

Adjust the noise reduction value to adjust the noise reduction intensity of the cameras’ image capacity. The adjustment range is 0-4.0. The higher the value is, the better effect the cameras are.

Noise reduction mode: determines whether to enable the noise reduction function. ON means that the noise reduction function is enabled; OFF means the noise reduction function is turned off.

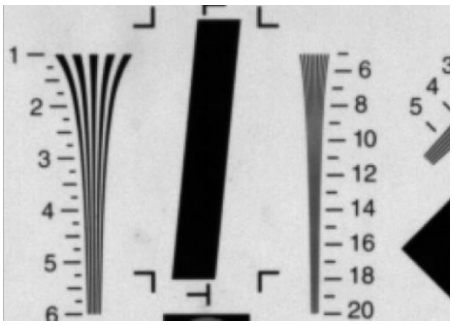

Figure 8-72 Before noise reduction

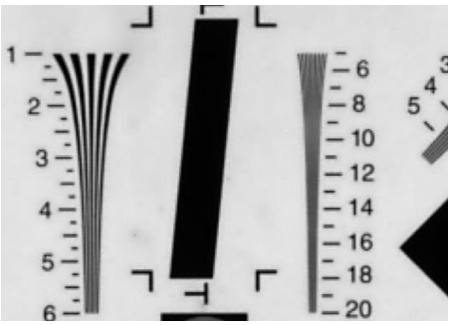

Figure 8-73 After noise reduction

8.5. Image Compression

8.5.1. Lossless Compression

When this function is enabled, the camera can output images in a compressed format, which reduces transmission bandwidth and improves the camera's frame rate.

This feature must be used in conjunction with the decompression library on the PC side. Before use, please confirm whether the local SDK installation package supports decompression.

Verification methods:

1) Check the C SDK Programming Reference Manual for the presence of the DxDecompression interface.

2) Ensure the release version of the installation package is from November 2025 or later.

8.5.1.1. Attribute Table

Attribute name	Type	Access	Definition
ImageCompressionMode	Enum	RW	Optional: Off, Lossless
ImageCompressionMethod	Enum	RO	Compression algorithm used for lossless compression
ImageDecompressionPerformance	Enum	RW	Current decompression performance. Modifying this value can appropriately improve decompression performance.
ImageCompressionSizeMax	Float	RO	The maximum frame size (Unit: byte) among all compressed images received by the PC during the current acquisition round. This value is cleared after the next acquisition.

ImageCompressionSizeMean	Float	RO	The average frame size (Unit: byte) among all compressed images received by the PC during the current acquisition round. This value is cleared after the next acquisition.
ImageCompressionSizeMin	Float	RO	The minimum frame size (Unit: byte) among all compressed images received by the PC during the current acquisition round. This value is cleared after the next acquisition.
StreamMissingBlockIDCount	Float	RO	The number of frames that were overwritten in the frame buffer due to insufficient bandwidth preventing image transmission.
AcquisitionFrameRateMode	Enum	RW	Indicates whether the frame rate control mode is currently enabled.
AcquisitionFrameRate	Float	RW	The user-configured target frame rate. (Enabled when AcquisitionFrameRateMode is set to On)
CurrentAcquisitionFrameRate	Float	RO	The camera's current acquisition frame rate.

8.5.1.2. Usage Steps

Step 1: Configure the camera.

Scenario 1: Only increase transmission bandwidth.

1) Keep the camera in a non-acquisition state.

2) Set "ImageCompressionMode" to "Lossless".

3) Start acquisition.

Scenario 2: Simultaneously increase transmission bandwidth and frame rate

1) Keep the camera in a non-acquisition state.

2) Set "ImageCompressionMode" to "Lossless".

3) Set "AcquisitionFrameRateMode" to "On".

4) Set "AcquisitionFrameRate" to the desired frame rate.

5) Start acquisition.

6) Adjust the frame rate and observe the values of"AcquisitionFrameRate" and "CurrentAcquisitionFrameRate".

   a) If "AcquisitionFrameRate" > "CurrentAcquisitionFrameRate", it indicates the camera cannot reach the set frame rate in the current test environment. Reduce the frame rate; otherwise, frame buffer overwrites will occur (the value of "StreamMissingBlockIDCount" will continuously increase).

b) If "AcquisitionFrameRate" = "CurrentAcquisitionFrameRate" and the value of "StreamMissingBlockIDCount" does not increase, it means the camera can achieve the desired frame rate in the current test environment.

By following these six steps, the camera can reach its maximum output frame rate for the current acquisition scenario.

Step 2: Decompress and use on PC.

After enabling lossless compression, all images acquired by the user will be compressed data and cannot be directly used for any image processing operations. The images must be decompressed before use. For the decompression process, refer to the example program "GxCompression".

Regarding decompression speed on the PC, you can adjust the number of logical processors involved in decompression by setting "ImageDecompressionPerformance" to improve the speed of the decompression interface:

Level 1: 1 logical processor used for decompression.

Level 2: 2 logical processors used for decompression.

Level 3: 4 logical processors used for decompression.

Level 4: 8 logical processors used for decompression.

Level 5: 16 logical processors used for decompression.

Recommended Setting: Set the "ImageDecompressionPerformance" level to ≤ (number of logical processors on the computer - 1). A higher level setting for "ImageDecompressionPerformance" will result in higher CPU resource usage, which may impact the performance of other applications.

8.5.1.3. Important Notes

Upon enabling lossless compression on the MARS-6500/6501-18GTM(-NF), brightness may exhibit slight variations:

- When the pixel bit depth is 8 bits, the gray value will be increased by 1.
- When the pixel bit depth is 12 bits, the gray value will be reduced by 2.

Upon enabling lossless compression on the MARS-6500/6501-18GTC(-NF), brightness may exhibit slight variations:

- When the pixel bit depth is 8 bits, the gray value of the R channel will be increased by 5, the gray value of the G channel will be increased by 1, the gray value of the B channel will be increased by 4.
- When the pixel bit depth is 12 bits, the gray value of the R channel will be reduced by 1, the gray value of the G channel will be reduced by 1, the gray value of the B channel will be reduced by 2.

8.6. Image Transmission

8.6.1. Maximum Allowable Frame Rate

1) The maximum allowable frame rate of the network

The maximum allowable frame rate of the network is the camera's maximum transmission frame rate that the current network supports. The maximum frame rate that the MARS 10GigE series camera network supports is determined by the camera's resolution, pixel format (Pixel Size), and the valid network bandwidth. It is can be expressed by the formula:

The maximum allowable frame rate of the network = the valid network bandwidth/ resolution/ Pixel Size

Example 1: The camera’s resolution is 5120*5120, the pixel format is BayerGB8, packet size is 1500 bytes, packet delay is 0, and reserved bandwidth is 10%. The current valid network bandwidth is 9000Mbps.

The maximum allowable frame rate of the network = 9000Mbps / (5120*5120)/8 = 43 fps

The maximum allowable frame rate of the network is 43fps, and the MARS-2621-42GTM/C camera meets the front-end sensor's maximum acquisition frame rate of 41.84fps. In addition to the limitations of network bandwidth, the maximum working frame rate of the camera is affected by the following two factors:

- The camera front-end sensor readout time and the camera internal transfer time is called the camera acquisition time. The camera acquisition time is affected by the ROI which is set by the user
- The camera's exposure time

2) The calculation of the camera's acquisition time

The camera's acquisition time is related to the OffsetY and the height of the ROI. When the OffsetY and height of the ROI is changed, it will affect the front-end acquisition frame period of the camera, then affect the acquisition frame rate.

The specific calculation formulas are as follows:

- MARS--170-662GTM/C

Binning Closed:

When pixel format is Mono8 or Bayer RG8 (BPP8), row period (unit: μs):

$$T_{row}=\frac{63}{54}=1.167$$

When pixel format is Mono8 or Bayer RG8 (BPP10), row period (unit: μs):

$$T_{row}=\frac{75}{54}=1.389$$

When pixel format is Mono8 or Bayer RG8 (BPP12), row period (unit: μs):

$$T_{row}=\frac{89}{54}=1.648$$

When pixel format is Mono10 or Bayer RG10 (BPP10), row period (unit: μs):

$$T_{row}=\frac{105}{54}=1.944$$

When pixel format is Mono12 or Bayer RG12 (BPP12), row period (unit: μs):

$$T_{row}=\frac{105}{54}=1.944$$

When pixel format is Bayer RG12 Packed or Mono12 Packed (BPP12), row period (unit: μs):

$$T_{row}=\frac{89}{54}=1.648$$

When pixel format is RGB8 (BPP8), row period (unit: μs):

$$T_{row}=\frac{158}{54}=2.926$$

When pixel format is RGB8 (BPP10), row period (unit: μs):

$$T_{row}=\frac{158}{54}=2.926$$

When pixel format is RGB8 (BPP12), row period (unit: μs):

$$T_{row}=\frac{158}{54}=2.926$$

Binning Opened:

When pixel format is Mono8 or Bayer RG8 (BPP8), row period (unit: μs):

$$T_{row}=\frac{63}{54}=1.167$$

When pixel format is Mono8 or Bayer RG8 (BPP10), row period (unit: μs):

$$T_{row}=\frac{75}{54}=1.389$$

When pixel format is Mono8 or Bayer RG8 (BPP12), row period (unit: μs):

$$T_{row}=\frac{89}{54}=1.648$$

When pixel format is Mono10 or Bayer RG10 (BPP10), row period (unit: μs):

$$T_{row}=\frac{75}{54}=1.389$$

When pixel format is Mono12 or Bayer RG12 (BPP12), row period (unit: μs):

$$T_{row}=\frac{89}{54}=1.648$$

When pixel format is Bayer RG12 Packed or Mono12 Packed (BPP12), row period (unit: μs):

$$T_{row}=\frac{89}{54}=1.648$$

© 2026 China Daheng Group, Inc. Beijing Image Vision Technology Branch

When pixel format is RGB8 (BPP8), row period (unit: μs):

$$T_{row}=\frac{79}{54}=1.463$$

When pixel format is RGB8 (BPP10), row period (unit: μs):

$$T_{row}=\frac{79}{54}=1.463$$

When pixel format is RGB8 (BPP12), row period (unit: μs):

$$T_{row}=\frac{89}{54}=1.648$$

Camera acquisition time (unit: μs):

When Sensor Bit Depth is BPP10:

$$T_{acq}=(Height\times BinningVertical+40)\times T_{row}$$

When Sensor Bit Depth is BPP8 / BPP12:

$$T_{acq}=(Height\times BinningVertical+92)\times T_{row}$$

The cycle calculation is rounded up.

- MARS-280-409GTM/C

Binning Closed:

When pixel format is Mono8 or Bayer RG8 (BPP8), row period (unit: μs):

$$T_{row}=\frac{85}{54}=1.574$$

When pixel format is Mono8 or Bayer RG8 (BPP10), row period (unit: μs):

$$T_{row}=\frac{94}{54}=1.74$$

When pixel format is Mono8 or Bayer RG8 (BPP12), row period (unit: μs):

$$T_{row}=\frac{152}{54}=2.815$$

When pixel format is Mono10 or Bayer RG10 (BPP10), row period (unit: μs):

$$T_{row}=\frac{127}{54}=2.352$$

When pixel format is Mono12 or Bayer RG12 (BPP12), row period (unit: μs):

$$T_{row}=\frac{152}{54}=2.815$$

When pixel format is Bayer RG12 Packed or Mono12 Packed (BPP12), row period (unit: μs):

$$T_{row}=\frac{152}{54}=2.815$$

© 2026 China Daheng Group, Inc. Beijing Image Vision Technology Branch

When pixel format is RGB8 (BPP8), row period (unit: μs):

$$T_{row}=\frac{191}{54}=3.537$$

When pixel format is RGB8 (BPP10), row period (unit: μs):

$$T_{row}=\frac{191}{54}=3.537$$

When pixel format is RGB8 (BPP12), row period (unit: μs):

$$T_{row}=\frac{191}{54}=3.537$$

Binning Opened:

When pixel format is Mono8 or Bayer RG8 (BPP8), row period (unit: μs):

$$T_{row}=\frac{85}{54}=1.574$$

When pixel format is Mono8 or Bayer RG8 (BPP10), row period (unit: μs):

$$T_{row}=\frac{94}{54}=1.74$$

When pixel format is Mono8 or Bayer RG8 (BPP12), row period (unit: μs):

$$T_{row}=\frac{152}{54}=2.815$$

When pixel format is Mono10 or Bayer RG10 (BPP10), row period (unit: μs):

$$T_{row}=\frac{94}{54}=1.74$$

When pixel format is Mono12 or Bayer RG12 (BPP12), row period (unit: μs):

$$T_{row}=\frac{152}{54}=2.815$$

When pixel format is Bayer RG12 Packed or Mono12 Packed (BPP12), row period (unit: μs):

$$T_{row}=\frac{152}{54}=2.815$$

When pixel format is RGB8 (BPP8), row period (unit: μs):

$$T_{row}=\frac{95}{54}=1.759$$

When pixel format is RGB8 (BPP10), row period (unit: μs):

$$T_{row}=\frac{95}{54}=1.759$$

When pixel format is RGB8 (BPP12), row period (unit: μs):

$$T_{row}=\frac{152}{54}=2.815$$

© 2026 China Daheng Group, Inc. Beijing Image Vision Technology Branch

Camera acquisition time (unit: μs):

When Sensor Bit Depth is BPP10:

$$T_{acq}=(Height\times BinningVertical+49)\times T_{row}$$

When Sensor Bit Depth is BPP8 / BPP12:

$$T_{acq}=(Height\times BinningVertical+200)\times T_{row}$$

The cycle calculation is rounded up.

- MARS-321-176GTM-TN-SWIR \ MARS-533-134GTM-TN-SWIR

When the Sensor bit depth is BPP10, row period (unit: μs):

$$T_{row}=\frac{209}{60}=3.483$$

When the Sensor bit depth is BPP12, row period (unit: μs):

$$T_{row}=\frac{356}{60}=5.933$$

Camera acquisition time (unit: μs):

$$T_{acq}=(Height\times BinningVertical+84)\times T_{row}$$

- MARS-533-170GTM-TN-SWIR

When the Sensor bit depth is BPP10, row period (unit: μs):

$$T_{row}=\frac{197}{72}=2.737$$

When the Sensor bit depth is BPP12, row period (unit: μs):

$$T_{row}=\frac{342}{72}=4.75$$

Camera acquisition time (unit: μs):

$$T_{acq}=(Height\times BinningVertical+84)\times T_{row}$$

- MARS-561-207GTM/C(-NF)

When the pixel format is Mono8 or BayerGB8, row period (unit: μs):

$$T_{row}=\frac{1\times 176}{80}=2.2$$

$$T_{fot}=22.0$$

When the pixel format is Mono10 or BayerGB10, row period (unit: μs):

$$T_{row}=\frac{1\times 352}{80}=4.4$$

$$T_{fot}=44.0$$

Camera acquisition time (unit: μs):

$$T_{acq}=(Height\times BinningVertical+16)\times T_{row}+T_{fot}$$

- MARS-900-120GTM/C(-NF)

When the pixel format is Mono8 or BayerGB8, row period (unit: μs):

$$T_{row}=\frac{2\times152}{80}=3.8$$

$$T_{fot}=36.1$$

When the pixel format is Mono12 or BayerGB12, row period (unit: μs):

$$T_{row}=\frac{2\times304}{80}=7.6$$

$$T_{fot}=72.2$$

Camera acquisition time (unit: μs):

$$T_{acq}=(Height\times BinningVertical+16)\times T_{row}+T_{fot}$$

- MARS-1261-90GTM/C(-NF)

When the pixel format is Mono8 or BayerRG8, row period (unit: μs):

$$T_{row}=\frac{230}{2\times32}=3.594$$

$$T_{fot}=79.1$$

When the pixel format is Mono12 or BayerRG12, row period (unit: μs):

$$T_{row}=\frac{2\times230}{2\times32}=7.188$$

$$T_{fot}=158.2$$

Camera acquisition time (unit: μs):

$$T_{acq}=(Height\times BinningVertical)\times T_{row}+T_{fot}$$

- MARS-1610-52GTM/C(-NF)

When the Decimation is Off:

When the sensor bit depth is BPP8, row period (unit: μs):

$$T_{row}=\frac{326}{54}=6.038$$

When the sensor bit depth is BPP10 row period (unit: μs):

$$T_{row}=\frac{477}{54}=8.834$$

When the sensor bit depth is BPP12, row period (unit: μs):

$$T_{row}=\frac{477}{54}=8.834$$

© 2026 China Daheng Group, Inc. Beijing Image Vision Technology Branch

When the Decimation is On:

When the sensor bit depth is BPP8, row period (unit: μs):

$$T_{row}=\frac{211}{54}=3.908$$

When the sensor bit depth is BPP10 row period (unit: μs):

$$T_{row}=\frac{220}{54}=4.075$$

When the sensor bit depth is BPP12, row period (unit: μs):

$$T_{row}=\frac{304}{54}=5.630$$

Camera acquisition time (unit: μs):

$$T_{acq}=(Height\times BinningVertical+144)\times T_{row}$$

The calculation of the row period is rounded up.

- MARS-1840-63GTM/C(-NF)

When the pixel format is Mono8 or BayerGB8, row period (unit: μs):

$$T_{row}=\frac{2\times 152}{80}=3.8$$

$$T_{fot}=51.3$$

When the pixel format is Mono12 or BayerGB12, row period (unit: μs):

$$T_{row}=\frac{2\times 304}{80}=7.6$$

$$T_{fot}=102.6$$

Camera acquisition time (unit: μs):

$$T_{acq}=(Height\times BinningVertical+16)\times T_{row}+T_{fot}$$

- MARS-2020-42GTM/C(-NF)

When the Decimation is Off:

When the sensor bit depth is BPP8, row period (unit: μs):

$$T_{row}=\frac{273}{54}=5.056$$

When the sensor bit depth is BPP10 row period (unit: μs):

$$T_{row}=\frac{342}{54}=6.334$$

When the sensor bit depth is BPP12, row period (unit: μs):

$$T_{row}=\frac{406}{54}=7.519$$

© 2026 China Daheng Group, Inc. Beijing Image Vision Technology Branch

When the Decimation is On:

When the sensor bit depth is BPP8, row period (unit: μs):

$$T_{row}=\frac{211}{54}=3.908$$

When the sensor bit depth is BPP10 row period (unit: μs):

$$T_{row}=\frac{220}{54}=4.075$$

When the sensor bit depth is BPP12, row period (unit: μs):

$$T_{row}=\frac{304}{54}=5.630$$

Camera acquisition time (unit: μs):

$$T_{acq}=(Height\times BinningVertical+124)\times T_{row}$$

The calculation of the row period is rounded up.

- MARS-2440-35GTM/C(-NF)

When the Decimation is Off:

When the sensor bit depth is BPP8, row period (unit: μs):

$$T_{row}=\frac{326}{54}=6.038$$

When the sensor bit depth is BPP10 row period (unit: μs):

$$T_{row}=\frac{477}{54}=8.834$$

When the sensor bit depth is BPP12, row period (unit: μs):

$$T_{row}=\frac{477}{54}=8.834$$

When the Decimation is On:

When the sensor bit depth is BPP8, row period (unit: μs):

$$T_{row}=\frac{211}{54}=3.908$$

When the sensor bit depth is BPP10 row period (unit: μs):

$$T_{row}=\frac{220}{54}=4.075$$

When the sensor bit depth is BPP12, row period (unit: μs):

$$T_{row}=\frac{304}{54}=5.630$$

Camera acquisition time (unit: μs):

$$T_{acq}=(Height\times BinningVertical+118)\times T_{row}$$

The calculation of the row period is rounded up.

- MARS-2621-42GTM/C(-NF) \ MARS-2622-42GTM/C(-NF)
  MARS-2621-42GTM(-NF)-NIR \ MARS-2622-42GTM(-NF)-NIR
  MARS-2621-42GTM/C-S \ MARS-2622-42GTM/C-S
  MARS-2621-42GTM-NIR-S \ MARS-2622-42GTM-NIR-S

When the pixel format is Mono8 or BayerGB8, row period (unit: μs):

$$T_{row}=\frac{3\times 124}{80}=4.65$$

$$T_{fot}=23.25$$

When the pixel format is Mono12 or BayerGB12, row period (unit: μs):

$$T_{row}=\frac{3\times 248}{80}=9.3$$

$$T_{fot}=46.5$$

Camera acquisition time (unit: μs):

$$T_{acq}=(Height\times BinningVertical+16)\times T_{row}+T_{fot}$$

- MARS-2440-35GTM-NF-V

When the Decimation is Off:

When the sensor bit depth is BPP8, row period (unit: μs):

$$T_{row}=\frac{326}{54}=6.038$$

When the sensor bit depth is BPP10 row period (unit: μs):

$$T_{row}=\frac{477}{54}=8.834$$

When the sensor bit depth is BPP12, row period (unit: μs):

$$T_{row}=\frac{477}{54}=8.834$$

When the Decimation is On:

When the sensor bit depth is BPP8, row period (unit: μs):

$$T_{row}=\frac{211}{54}=3.908$$

When the sensor bit depth is BPP10 row period (unit: μs):

$$T_{row}=\frac{220}{54}=4.075$$

© 2026 China Daheng Group, Inc. Beijing Image Vision Technology Branch

When the sensor bit depth is BPP12, row period (unit: μs):

$$T_{row}=\frac{304}{54}=5.630$$

Camera acquisition time (unit: μs):

$$T_{acq}=(Height\times BinningVertical+118)\times T_{row}$$

The calculation of the row period is rounded up.

- MARS-2621-42GTM/C(-NF) \ MARS-2622-42GTM/C(-NF)
  MARS-2621-42GTM(-NF)-NIR \ MARS-2622-42GTM(-NF)-NIR
  MARS-2621-42GTM/C-S \ MARS-2622-42GTM/C-S
  MARS-2621-42GTM-NIR-S \ MARS-2622-42GTM-NIR-S

When the pixel format is Mono8 or BayerGB8, row period (unit: μs):

$$T_{row}=\frac{3\times 124}{80}=4.65$$

$$T_{fot}=23.25$$

When the pixel format is Mono12 or BayerGB12, row period (unit: μs):

$$T_{row}=\frac{3\times 248}{80}=9.3$$

$$T_{fot}=46.5$$

Camera acquisition time (unit: μs):

$$T_{acq}=(Height\times BinningVertical+16)\times T_{row}+T_{fot}$$

- MARS-5000-18GTM/C(-NF/TF)

When the pixel format is Mono8 or BayerGB8, row period (unit: μs):

$$T_{row}=\frac{2\times 188}{80}=4.7$$

$$T_{fot}=72.85$$

When the pixel format is Mono12 or BayerGB12, row period (unit: μs):

$$T_{row}=\frac{2\times 376}{80}=9.4$$

$$T_{fot}=145.7$$

Camera acquisition time (unit: μs):

$$T_{acq}=(Height*BinningVertical+16)*T_{row}+T_{fot}$$

- MARS-6500/6501-18GTM/C(-NF/TF)

The row period of MARS-6500/6501-18GTM/C(-NF/TF) is shown in the table below. BlockLevel FFC refers to setting the FFCAccuracy to "BlockLevel", while PixelLevel FFC refers to setting the FFCAccuracy to "PixelLevel".

	Pixel Format	T_{row}(μs)
BlockLevel FFC	BayerGB8/Mono8	6.2
PixelLevel FFC	BayerGB8/8/Mono8	9.4
BlockLevel FFC	BayerGB12/Mono12	12.4
PixelLevel FFC	BayerGB12/Mono12	15.6
BlockLevel FFC	RGB8/BGR8	18.6
PixelLevel FFC	RGB8/BGR8	21.9
BlockLevel FFC	BayerGB12Packed/Mono12Packed	9.3
PixelLevel FFC	BayerGB12Packed/Mono12Packed	12.5

$$T_{fot}=192.2\mu s$$

Camera acquisition time (unit: μs):

$$T_{acq}=(Height\times BinningVertical+16)\times T_{row}+T_{fot}$$

- MARS-6100-18GTM/C-TF

When the Decimation is Off:

When the pixel format is Mono8 or BayerRG8, row period (unit: μs):

$$T_{row}=\frac{624}{72}=8.667$$

When the pixel format is RGB8 or BGR8, row period (unit: μs):

$$T_{row}=\frac{1872}{72}=26.000$$

When the pixel format is Mono12 or BayerRG12, row period (unit: μs):

$$T_{row}=\frac{1024}{72}=14.222$$

When the pixel format is Mono14 or BayerRG14, row period (unit: μs):

$$T_{row}=\frac{1120}{72}=15.556$$

When the pixel format is Mono16 or BayerRG16, row period (unit: μs):

$$T_{row}=\frac{2810}{72}=39.028$$

When the Decimation is On

When the pixel format is Mono8 or BayerRG8, row period (unit: μs):

$$T_{row}=\frac{580}{72}=8.056$$

When the pixel format is RGB8 or BGR8, row period (unit: μs):

$$T_{row}=\frac{900}{72}=12.500$$

When the pixel format is Mono12 or BayerRG12, row period (unit: μs):

$$T_{row}=\frac{580}{72}=8.056$$

Camera acquisition time (unit: μs):

$$T_{acq}=(Height\times BinningVertical+84)\times T_{row}$$

- MARS-15100-6GTM/C-TF

The row period of MARS-15100-6GTM/C -TF is shown in the table below. BlockLevel FFC refers to setting the FFCAccuracy to "BlockLevel", while PixelLevel FFC refers to setting the FFCAccuracy to "PixelLevel".

	Pixel Format	T_{row}(μs)
BlockLevel FFC	BayerRG8/Mono8	15
PixelLevel FFC	BayerRG8/Mono8	14.5
BlockLevel FFC	BayerRG14/Mono14	20.194
PixelLevel FFC	BayerRG14/Mono14	24
BlockLevel FFC	BayerRG16/Mono16	45.417
PixelLevel FFC	BayerRG16/Mono16	45.417
BlockLevel FFC	YUV422_8	16.667
PixelLevel FFC	YUV422_8	19

Camera acquisition time (unit: μs):

$$T_{acq}=(Height\times BinningVertical+VB_{min})\times T_{row}$$

When the sensor bit depth is 16 bits, $VB_{min}=126$. When the sensor bit depth is 14 bits, $VB_{min}=128$. When the sensor bit depth is 12 bits, $VB_{min}=120$.

- The camera's acquisition frame rate

In addition to the maximum allowable bandwidth of the network and the time limit for camera acquisition, the exposure time can also affect the frame rate. For example: for MARS-2621-42GTM/C camera, when the exposure time is 200ms, the corresponding frame rate is 5fps.

In conclusion, the frame rate of the camera takes the minimum of the maximum allowable frame rate of the network, the acquisition frame rate and the exposure frame rate.

8.6.2. Stream Channel Packet Size

Stream channel packet size (SCPS) refers to the network packet's size of the stream channel data which is transferred to the host terminal by the camera, in bytes and the default value is 1500. It includes the IP header, UDP header and GVSP header which the total length is 36 bytes, so the payload in the default

channel network packet is 1464 bytes. When the link speed is 10Gbps or 1Gbps, the recommended maximum SCPS can be set to 8164 bytes, which can improve the network transmission performance.

1) When the packet size is set to more than 1500 bytes, it needs the network equipment such as network card and switch to support the jumbo frames.
2) When changing the packet size, the packet size and the packet delay will affect the network transfer performance together.

8.6.3. Stream Channel Packet Delay

The stream channel packet delay (SCPD) is used to control the bandwidth of the image streaming data of the camera. The packet delay is the number of the idle clocks that inserted between adjacent network packets transmitted in the stream channel. Increase the packet delay can reduce the camera's bandwidth usage, and it may also reduce the camera's frame rate (the camera frame rate also depends on the exposure time, camera acquisition time).

The camera's packet size, packet delay and reserved bandwidth determine the effective network bandwidth. The effective network bandwidth is calculated as follows:

The time required to transmit a single stream packet:

$$T_{data}=(Size_{pkt}\times 8\ bits)/Speed_{link}$$

Effective network bandwidth:

$$BandW_{avial}=(Size_{pkt}\times 8bits\times(1-BandW_{reserve})/(T_{data}+T_{delay})$$

Among them: the $Size_{pkt}$ is packet size, $Delay_{pkt}$ is packet delay, $BandW_{reserve}$ is reserved bandwidth, $Speed_{link}$ is link speed.

Example 1: The packet size is 1500, the packet delay is 1000, the reserved bandwidth is 20%, and the link speed is 10Gbps.

The time to transport a single stream packet is:

$$T_{data}=(1500\times 8)/10{,}000{,}000{,}000=1.2us$$

The effective network bandwidth is:

$$BandW_{avial}=(1464\times 8\times(1-0.2))/(1.2us+1us)=4259Mbps$$

Note: Each stream packet contains 36 bytes of network header data, and a packet with the size of 1500 bytes contains only 1464 bytes of valid data.

Example 2: The packet size is 8192, the packet delay is 2000, the reserved bandwidth is 20%, and the link speed is 10Gbps.

The time to transport a single stream packet is:

$$T_{data}=(8192\times 8)/10{,}000{,}000{,}000=6.5us$$

© 2026 China Daheng Group, Inc. Beijing Image Vision Technology Branch

The effective network bandwidth is:

$$BandW_{avial}=(8156\times8\times(1-0.2))/(6.5us+2us)=6141Mbps$$

1) The packet delay time cannot be greater than the packet timeout and the block timeout.
2) The packet delay time should be less than the packet timeout + 20(ms).
3) The packet delay time should be less than the block timeout + 20(ms).

8.6.4. Bandwidth Reserve

The Bandwidth Reserve is used to reserve a part of bandwidth for packet retransmission and control data transfer between the camera and the host, and can be used for multiple cameras transmission, to limit the bandwidth allocation of each camera. For example, the network bandwidth is 10Gbps, setting the reserved bandwidth value to 2%, then the bandwidth will be reserved to 0.2Gbps. When the maximum bandwidth required for transmission is greater than the current bandwidth available, the camera reduces the frame rate to ensure the stability of the transmission.

8.7. Events

When event notification is set to “on”, the camera can generate an “event” and transmit a related event message to the host whenever a specific situation has occurred. For MARS 10GigE series camera, the camera can generate and transmit events for the following situations:

- The camera has ended exposure (ExposureEnd)
- An image block is discarded (BlockDiscard)
- The trigger signal overflow (FrameStartOvertrigger)
- The image frame block is not empty (BlockNotEmpty)
- The event queue is overflow (EventOverrun)

Every event has a corresponding enable status, and in default all the events’ enable status are disable.

When using the event feature, you need to enable the corresponding event firstly and set the port of the event channel, the timeout of the event retransmission, and the number of times the event retransmission to the camera. When the retransmission timeout of the event is set to 0, the event sent by the camera will not require the host to return the reply packet. When the port value of the event channel is set to 0, the camera will not send the event to the host. In other cases, the camera needs to receive a host reply packet before sending the next event. When the event that the camera sends does not receive the reply packet, the camera will retransmit the event according to the retransmission timeout and retransmission times.

The effective information contained in each event is shown in Table 8-4:

No.	Event Type	Information
1	ExposureEnd Event	Event ID

		Frame ID
		Timestamp
2	BlockDiscard Event	Event ID
		Timestamp
3	EventOverrun Event	Event ID
		Timestamp
4	FrameStartOvertrigger Event	Event ID
		Timestamp
5	BlockNotEmpty Event	Event ID
		Timestamp
6	FrameBurstStartOvertrigger Event	Event ID
		Frame ID
		Timestamp
7	FrameStartWait Event	Event ID
		Timestamp
8	FrameBurstStartWait Event	Event ID
		Timestamp

Table 8-4 The effective information of each event

Among them: the timestamp is the time when the event occurs, and the timer starts when the camera is powered on or reset. The bit width of the timestamp is 64bits, and the unit is ns.

8.7.1. ExposureEnd Event

If the ExposureEnd Event is enabled, when the camera's sensor has been exposed, the camera sends out an ExposureEnd Event to the host, indicating that the exposure has been completed.

8.7.2. BlockDiscard Event

When the average bandwidth of the write-in data is greater than the average bandwidth of the read-out data, the frame buffer may overflow. If the frame buffer is full and the camera continue to write image data to it, then the new data will overwrite the previous image data which has been in the frame buffer. At this

moment, the camera sends a BlockDiscard event to the host, indicating that once image discard event has occurred. So, when you read the next frame of image, the image is not continuous.

8.7.3. EventOverrun Event

Inside the camera, there has an event queue which is used for caching events. Usually, the event data packet which is sent to the host only contains one event. When there are multiple events occur simultaneously, or when the event transmission is delay, the user can use event queue inside the camera to cache the events. When an event can be sent, the camera will send all the events cached in the queue, at this time the event data packet which is sent to the host contains multiple events. But if the camera is running in a high frame rate mode, and send several events that exceed the camera cache, at this time, if the EventOverrun event is enable, the camera will send an EventOverrun event to the host, and discard all the events in the current cache.

8.7.4. FrameStartOvertrigger Event

When the camera receives the FrameTrigger hardware trigger signal or software trigger signal, if the front-end sensor is exposing, it will not be able to respond to the new FrameTrigger signal, then the camera will send a FrameStartOvertrigger event to the host. Note that if multiple FrameTrigger signals are received within one frame acquisition period, the camera sends only one FrameStartOvertrigger event.

8.7.5. BlockNotEmpty Event

When the average bandwidth of the read-in data is greater than the average bandwidth of the readout data, if the frame buffer is not full, and there has image frame data in the frame buffer which has not been send out completely, then before the new image frame is written to the frame buffer, the camera will send a BlockNotEmpty event to the host, indicating that the previous image has not been send out completely when the new image is written in the frame buffer.

8.7.6. FrameBurstStartOvertrigger Event

When the camera is in FrameBurstStart trigger mode, when it receives an AcquisitionTrigger hardware trigger or software trigger signal, if the front-end sensor is exposing, it will not be able to respond to the new AcquisitionTrigger signal, and the camera will send a FrameBurstStartOvertrigger event to the host. Note that the camera will send the corresponding number of FrameBurstStartOvertrigger events if it receives multiple AcquisitionTrigger signals during the acquisition period of one frame of image.

8.7.7. FrameStartWait Event

When the camera is in FrameTrigger mode, the camera starts acquiring images, and if it does not receive the FrameTrigger signal, the camera will send a FrameStartWait event to the host.

8.7.8. FrameBurstStartWait Event

When the camera is in the AcquisitionTrigger mode, the camera starts acquiring images. If the camera does not receive the AcquisitionTrigger signal, the camera sends a FrameBurstStartWait event to the host. Note that if the FrameTrigger mode is set to on simultaneously with the AcquisitionTrigger mode, the FrameBurstStartWait event will be sent first. When the camera receives an AcquisitionTrigger signal, it will send a FrameBurstStartWait event.

© 2026 China Daheng Group, Inc. Beijing Image Vision Technology Branch

8.8. Sequencer

The Sequencer feature allows you to define sets of parameter settings and apply them to a sequence of image acquisitions. As the camera acquires images, it applies one sequence set after the other, as shown in Figure 8-74.

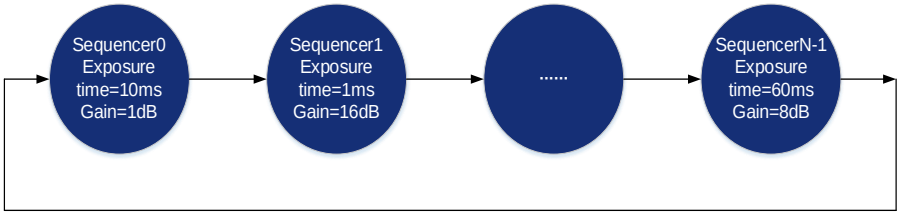

Figure 8-74 Sequencer feature schematic diagram

8.8.1. Features

[SequencerMode] Set the parameter to "On", enable the sequencer. Set the parameter to "Off", disable the sequencer. When enabled, the sequencer controls image acquisitions, switch to next sequence set after each image is acquired. When disabled, the sequencer is not controlling image acquisitions and cannot switch parameters.

[SequencerConfigurationMode] Set the parameter to "On", "SequencerSetSave" and "SequencerSetLoad" are enabled. Set the parameter to "Off", "SequencerSetSave" and "SequencerSetLoad" are disabled and parameters cannot be saved to the sequence sets.

[SequencerFeatureSelector] Configure the feature that support sequence, like ExposureTime, Gain, Gamma and FCC.

[SequencerFeatureEnabled] Set the parameter to “true”, the feature in "SequencerFeatureSelector" is supported sequence, currently only true are supported and cannot be changed.

[SequencerSetSelector] Set the sequence set number. The range is determined by the camera model.

[SequencerSetSave] Save parameters to the sequence set in "SequencerSetSelector"

[SequencerSetLoad] Click "SequencerSetLoad", the values of sequence set parameters are overwritten and replaced by the values stored in the selected sequence set.

[SequencerSetActive] When "SequencerMode" is set to "On", displays the sequence set number currently in use, as shown below. The advance from one sequence set to the next occurs automatically as FrameStart trigger signals are received. When "SequencerMode" is set to “Off”, displays "Not Available".

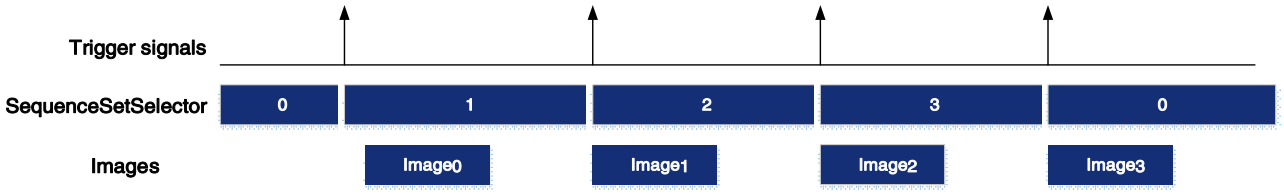

Figure 8-75 Timing diagram

[SequencerPathSelector] Not currently supported, the set value is fixed to 0.

[SequencerSetNext] The "SequencerSetSelector" sets number to which the next sequence set jumps. For example, if "SequencerSetSelector" is set to 1 and "SequencerSetNext" is set to 2, then after the camera uses the parameters to acquire an image, the sequence set will be switched to sequence set 2. Only sequential jump is supported, "SequencerSetSelector" is set to N, and then "SequencerSetNext" can only be set to N+1 or 0, and the maximum value of N+1 is "the maximum number of sequence sets supported-1". If the maximum number of sequences of cameras is 4, the maximum value of N+1 is 3.

[SequencerTriggerSource] The condition for the sequencer to start running, FrameStart only supported. Each time an image is acquired, the sequence switches to the next sequence set.

8.8.2. Example

- Set sequence parameters

1) Set the "SequencerMode" to "Off" and the "SequencerConfigurationMode" to "On".

2) Set the "SequencerSetSelector" parameter.

3) Click "SequencerSetLoad", the values of sequence set parameters are overwritten and replaced by the values stored in the selected sequence set.

4) Set the sequence set parameters: ExposureTime, Gain, Gamma, FFC coefficient number, etc.

5) Click "SequencerSetSave".

- Change the number of sequence sets used

By default, sequence set are set as 0->1->2->3...->N–1, but in some cases we may want the sequence set to run in the order 0->1->2->3->0->1->2->3, in which case this order can be achieved by "SequencerSetNext".

For example, we want the sequence sets to run in the order 0->1->2->0->1->2, the setting is as follows:

1) Set the "SequencerSetSelector" to 2.

2) Set the "SequencerSetNext" to 0.

1) Before "SequencerMode" set to "On", the auto gain, auto exposure and auto white balance functions must be set to "Off".

2) Sequencer parameters can't be saved in user set.

8.8.3. Sequence support

Summary of sequence support

Model	Max.sequence	Sequence support function
MARS-533-134GTM-TN-SWIR MARS-533-170GTM-TN-SWIR MARS-321-176GTM-TN-SWIR	8	ExposureTime, Gain, Gamma
MARS-561-207GTM/C(-NF) MARS-900-120GTM/C(-NF)	4	ExposureTime, Gain, Gamma

MARS-1261-90GTM/C(-NF) MARS-1610-52GTM/C(-NF) MARS-1840-63GTM/C(-NF) MARS-2020-42GTM/C(-NF) MARS-2440-35GTM/C(-NF) MARS-2440-35GTM-NF-V(PIV disable) MARS-2621/2622-42GTM/C(-NF) MARS-2621/2622-42GTM(-NF)-NIR MARS-2621/2622-42GTM/C-S MARS-2621/2622-42GTM-NIR-S		
MARS-170-662GTM/C MARS-5000-24GTM/C(-NF/TF) MARS-6500/6501-18GTM/C(-NF/TF) MARS-6100-18GTM/C-TF MARS-15100-6GTM/C-TF	16	ExposureTime, Gain, Gamma, FFC
MARS-280-409GTM/C	16	ExposureTime, Gain, Gamma

Table 8-5 Camera model sequence supported items

8.9. Fan Control

“Fan Control” is under the “Device Control”, which have two functions:

[FanEnable] Set this value as true, the fan start running, and as false, the fan stop running. When the fan is running, it will cooling down the whole machine.

[FanSpeed] The current fan speed after enable the fan (Unit: rpm).

8.10. PIV Mode

8.10.1. PIV Functional Description

Particle Image Velocimetry (PIV) is a type of non-contact measurement technology. It uses a double-pulse laser to illuminate tracer particles in the flow field and high-frame-frequency cameras to capture images of the particle motion continuously. And then uses a cross-correlation algorithm to calculate the transient flow velocity distributions based on the displacement changes of the particle swarms in the two consecutive frames.

When PIV mode is enabled, the camera acquires two frames during 1-trigger period. And the requirements for the exposure time of the two frames are as follows:

1) The first frame exposure control: adjustable range 50μs-1000μs(default 60μs).

2) The second frame exposure control: exposure time is determined by the read time of the first frame. And it is not adjustable.

3) Δt is the interframing time.

The synchronisation requirements for fill light require the following:

1) The fill light for the first frame needs to be applied before the end of the exposure for the first frame (t_1).

2) The fill light for the second frame needs to be triggered after the start of the exposure for the second frame (t_2).

The timing diagram is schematically shown below.

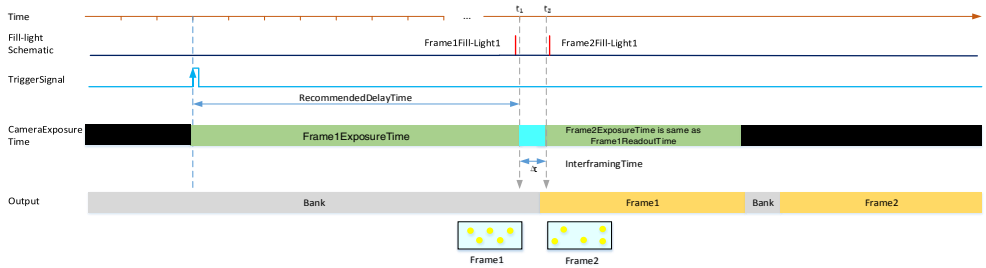

Figure 8-76 PIV Timing Schematic Diagram

8.10.2. PIV Setting Screen

The setting screen of PIV function is as follow.

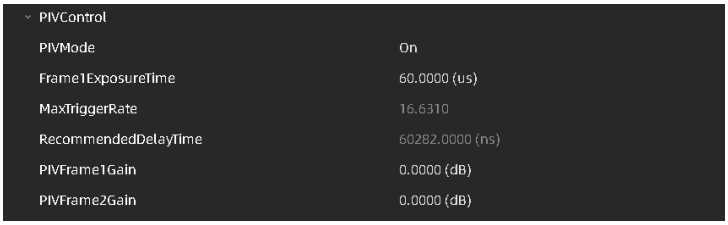

Figure 8-77 PIV Function Setting

[PIVMode] Set the parameter to "On", enable the PIV mode. Set the parameter to "Off", disable the PIV mode. When enabled, the camera output two frames with a very short interval in 1-trigger period. When disable, the camera operates in non-PIV mode and captures with normal functions.

[Frame1ExposureTime] Set the exposure time for the first frame in PIV mode, the unit is μs, the default value is 60μs, and the range is [50μs, 1000μs].

[MaxTriggerRate] Shows the maximum trigger frequency that can be provided in the current PIV mode configuration, the unit is Hz. The provided frequency of trigger signal must not be higher than this maximum value, otherwise it will lead to trigger blocking.

[RecommendedDelayTime] The recommended delay time between the hardware trigger signal and the laser, the unit is ns. User can find the boundary point of the end of the first frame exposure quickly in the camera's PIV mode base on this value. And the value will also change when the first frame exposure time is modified.

[PIVFrame1Ganin] Shows the digital gain of the first frame in PIV mode, the unit is dB, configurable range is [0, 48].

[PIVFrame2Ganin] Shows the digital gain of the second frame in PIV mode, the unit is dB, configurable range is [0, 48].

8.10.3. PIV Operation Process

Step 1: Enumerate cameras and acquire normally.

Step 2: Adjust the position and angle of the camera to ensure normal acquisition for obtaining clear images.

Step 3: Stop image acquisition.

Step 4: Set the “PIVMode” to “ON”.

Step 5: Modify “Frame1ExposureTime” according to the actual demand.

Step 6: Select the trigger mode. PIV mode supports continuous and trigger. Trigger supports software trigger, line0 hardware trigger and line2 hardware trigger.Line0 is opto-coupler triggered with good isolation effect and poor jitteriness, line2 is GPIO with general isolation effect and good jitteriness. It is necessary to select a trigger mode to obtain a stable trigger delay.

Step 7: Based on the value of current “RecommendedDelayTime”, adjust the interval between the fill light of the light source (or laser) and the trigger signal to fall precisely on the edge of interframing time.

8.10.4. PIV Precautions on Use

8.10.4.1. Camera Temperature Control

It is not conducive to control noise that camera temperature is too high. If the conditions allow, user can increase the passive cooling area, such as adding a heat sink. The image is better when the camera temperature is lower.

The camera have fan function. If the fan does not affect the test results, it is recommended to turn it on to actively cool the camera. If the fan affects the particle pattern or the vibration caused by the fan is unacceptable, the fan can also be turned off after cooling. The switch is available on the interface, see section 8.9 for details.

8.10.4.2. Particle Lightness Control

Limited by sensor performance, when shooting over-bright particles, the over-bright particles will accumulate a lot of charge. If the first frame is reset incompletely, it may remain in the second frame, resulting residual image of the first frame in the second frame.

It is recommended to adjust the light source appropriately so that the particles can be seen and less overexposed.

It is recommended to use smaller particles or adjust the shooting distance to reduce the number of pixels occupied by large particles.

Increased camera gain and compensate for the light intensity appropriately, such as setting a few DB of gain, adjusting the aperture down or adjusting the laser intensity down.

© 2026 China Daheng Group, Inc. Beijing Image Vision Technology Branch

9. Software Tools

9.1. GigE IP Configurator

You can set the IP Address and IP Configuration by **GxGigEIPConfig.**

- **Guidance**

Menu bar → Tools → GxGigEIPConfig, see Figure 9-1:

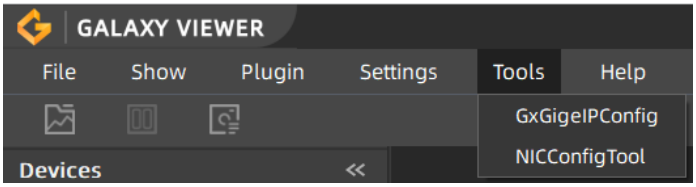

Figure 9-1

See GxGigEIPConfig interface as Figure 9-2:

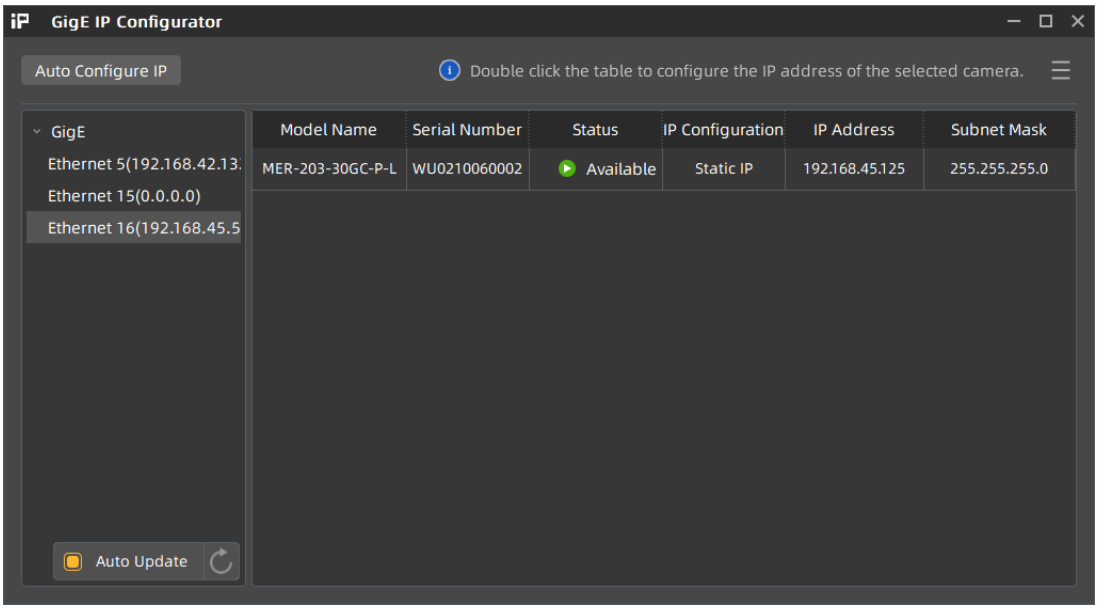

Figure 9-2 GxGigEIPConfig interface

The left side of the interface is device list, showing all searched GigE (Gigabit Ethernet)

1. When GigE is selected, all GigE cameras will be shown in the right side.
2. When selecting a certain GigE, the right side will only show the corresponding GigE cameras, and if you want to change the Ethernet attributes, just right click it.

1. **Auto Update** will enumerate devices automatically in every 2s, you can also click “ ” to update devices manually.
2. The essential information are listed in the right side, click “ ” in the top right-hand corner to set.

- **Status and operations**

Status: Available, Read Only, Occupy, Unreachable, Unknown.

Operations: Auto Configure IP, Modify IP Address, Release Occupation, Reset Device.

Icon	Status	Description	Operation
	Available	When the camera is not opened in Exclusive or Control mode by other processes. And the camera IP can be modified manually	1. Modify IP Address 2. Reset Device
	Read Only	When the camera is opened in Control mode by other processes. By this time, the Auto Configure IP and Modify IP Address will be forbidden	1. Release Occupation 2. Reset Device
	Occupy	When the camera is opened in Exclusive mode by other processes. By this time, the Auto Configure IP and Modify IP Address will be forbidden	1. Release Occupation 2. Reset Device
	Unreachable	Three conditions when in Unreachable status: 1. The current camera IP is same as other camera IP 2. The current camera IP is same as network card IP 3. The current camera IP and the connected network card are not in the same subnet	1. Modify IP Address 2. Auto Configure IP
	Unknown	Cannot get the current accessible state for some reason	1. Modify IP Address

Table 9-1 Device status description

Valid IP: Non LLA address, non 0.0.0.0.

- **Auto Configure IP**

By this function, all unreachable camera's IP will be changed to the effective IP, which has the same network segment as the PC network port.

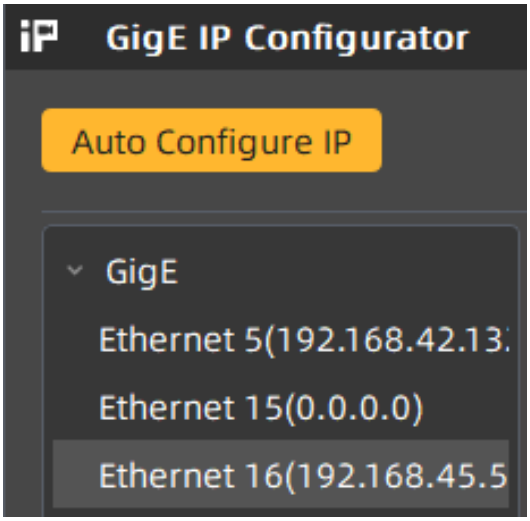

Figure 9-3

If the host network card IP is invalid, then after Auto Configure IP operation, it will be valid.

- **Modify IP Address**

Users can double click the row of the camera in the list, the window as Figure 9-4:

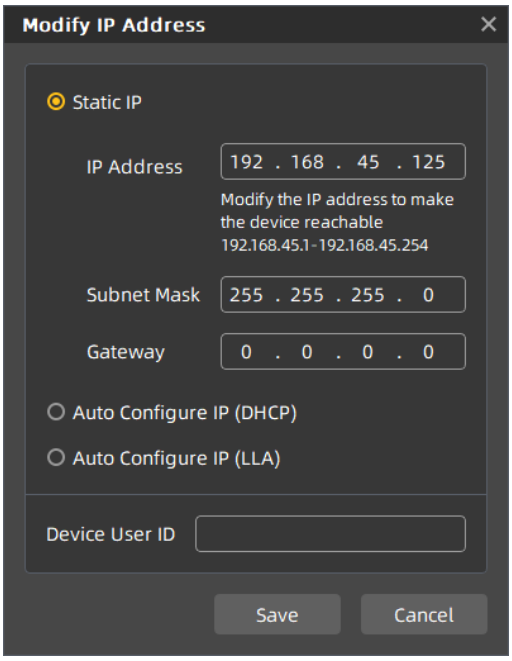

Figure 9-4 Modify IP Address

The default setting is **Static IP**, and in here, users can set **IP Address**, **Subnet Mask** and **Gateway**.

It is restrict to set the IP as: class D (224~239), Class E (240~254), IP start with 127 or 255. There will be an error prompt if you set the restrict IP or wrong format IP, in this case, **Save** is not available. See Figure 9-5:

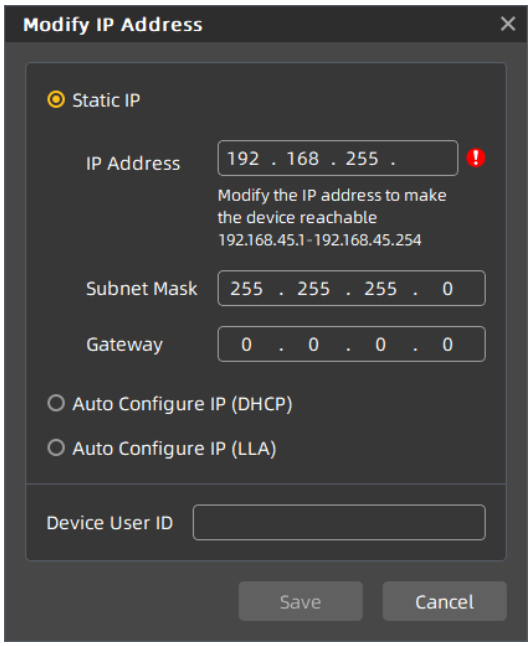

Figure 9-5 IP address format check

Users can set Static IP, DHCP or LLA according to their needs.

IP Configuring Type	Description
Static IP	Default configuration, which is saved in the camera Flash sensor and cannot be changed while power on/off
DHCP	When start with DHCP, please ensure that DHCP server is configured in your network environment, otherwise, the camera will restart in LLA address after waiting DHCP server assign IP overtime. But when DHCP server occurs, the camera IP will switch to DHCP assigned address, the default factory configuration of the camera is DHCP
LLA	Link-local address, which is used for local network communication, not forwarded through routing

Optional operation: Modify Device User ID, the maximum length of user-defined name is 16 characters.

Release Occupation: The camera heart beat time is 5min by default (VS develop, in debugging status). If users forcibly exits the process without closing the camera, then the camera cannot be resetting immediately, unless the 5min heart beat time is over, and by then, the camera is in Occupy or Unreachable status. Users can double click the row of the camera in the list to release the camera and open the camera again.

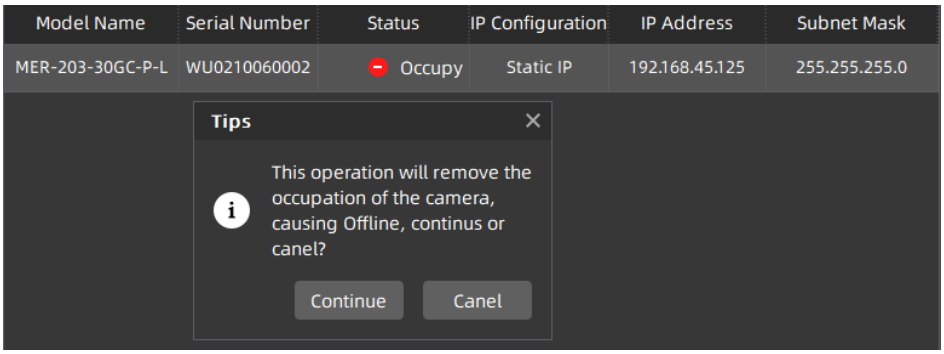

Figure 9-6

Reset Device: While users need to reload the camera and the device is not convenient to power off, then right click the row of the camera in the list and click Reset Device button.

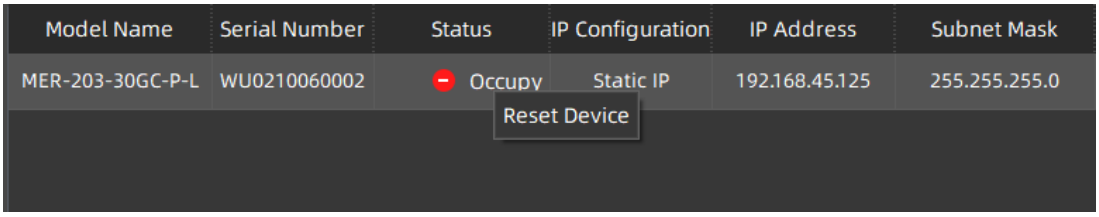

Figure 9-7

Be careful to use **Release Occupation** and **Reset Device**, they will cause the camera off-line while acquiring.

Require camera itself supports **Release Occupation** and **Reset Device.**

9.2. Frame Rate Calculation Tool

B2 fx WidthMax

	B	C
2	WidthMax	5120
3	HeightMax	5120
4	Width	5120
5	Height	5120
6	ExposureTime(us)	20000
7	PixelFormat(8/12)	8
8	GevSCPSPacketSize	8164
9	GevSCPD	0
10	GevSCPDMaxValue	2781558
11	GevFramerateAbsEn	0
12	GevFramerateABS	4.5
13	LinkSpeed(Mbps)	10000
14	BandwidthReserve	10
15	BandwidthReserveMaxValue	99
20		
21	FPS	41.84
89		
90		

Figure 9-8 Frame rate calculation tool

The frame rate calculation tool is currently provided in the form of Excel. When using it, firstly select the camera model in the table, and then achieve the expected frame rate by modifying the parameter of the camera. There are four major types of influencing factors, including image readout time (image width, image height, pixel format), exposure time, acquisition frame rate setting value, and image transmission bandwidth influence (packet size, packet delay, reserved bandwidth, link speed, pixel format, image width, image height, pixel format).

The parameters in Figure 9-8 are explained as follows:

1) The Width and Height are the set ROI size.

2) The ExposureTime is the exposure time when the camera acquires one frame of image.

3) The PixelFormat is the pixel format corresponding to the camera output image, including 8 bits, 10 bits or 12 bits.

4) The GevSCPSPacketSize represents the packet size of the camera. The default value is 1500 bytes. When the LinkSpeed is 10000Mbps, the maximum GevSCPSPacketSize can be set to 8192 bytes, but it is recommended to set as 8164. And it is necessary to ensure that the network card and the switch support jumbo frames.

5) The GevSCPD represents the packet delay between each frame of images.

6) The LinkSpeed refers to the network link speed between the camera and the host, which is divided into 1000Mbps/10000Mbps.

7) The GevSCPDMaxValue represents maximum packet delay can be set under the current parameters.

8) The BandwidthReserve represents the percentage of network bandwidth reserved for other network transmission, which is 2% by default.

9) The BandwidthReserveMaxValue represents the maximum reserved bandwidth that can be set under the current parameters.

10) The GevFramerateABS represents the maximum value of the GevFramerateAbsEn when GevFramerateAbsEn is enabled. Whether the maximum value can be reached depends on whether the camera is affected by other acquisition parameters.

11) The GevFramerateAbsEn indicates whether frame rate control is enabled, 1 means enable GevFramerateAbsEn, and 0 means disable GevFramerateAbsEn. When GevFramerateAbsEn is enabled, the camera acquires images at a frame rate that is no higher than the GevFramerateABS. When GevFramerateAbsEn is disabled, the camera acquires images without being affected by the GevFramerateABS.

When using the frame rate calculation tool, please fill in the above information of the camera into the corresponding table. When the filled value exceeds the range or does not conform to the rules, the calculation tool will report an error. Please modify and fill in the value again according to the prompt information. When all parameters are correctly filled in, the FPS shown in the last column of the table is the theoretical frame rate currently acquired by the camera, and usually the error between this value and the actual frame rate acquired by the camera is no more than 1%.

Take the MARS-2621-42GTM/C camera as an example:

If you want to set the camera's acquisition frame rate to 20fps with the "GevFramerateABS" function, you can set "GevFramerateAbsEn" to 1, set "GevFramerateABS" to 20, and then you can check "FPS" as 20fps.

If you want to adjust "GevSCPSPacketSize" and "GevSCPD" to make the frame rate of the camera to 20fps, you can select the "GevSCPSPacketSize" you want to use. If you set "GevSCPSPacketSize" to 8164, then gradually set the value of "GevSCPD" to make "FPS" approach 20fps. After several attempts, it can be concluded that when "GevSCPD" is set to 7390, the calculated result "FPS" is 20.00 fps.

© 2026 China Daheng Group, Inc. Beijing Image Vision Technology Branch

10. FAQ

No.	General Question	Answer
1	No images after starting acquisition.	1) Confirm that the camera packet size is greater than 1500, generally the packet size is set to be the maximum. If the host is not in jumbo frame mode, modify the maximum size of the IP packet to jumbo frame mode. 2) Load the default parameter set, reopen the application program, and then start acquisition again. 3) Run the demo program, and open the configuration page to confirm whether the data packet is received. If there are data packets, but they are all incomplete frames, please check your environment requirements in section 2.4.
2	The frame rate is not up to the nominal value.	1) Choose a better host. 2) Choose a recommended Intel series 10 Gigabit network card or IOI series 10 Gigabit network card. 3) Contact with the technical support.
3	Lose frames seriously in a multiple cameras' application.	1) Adjust the packet size or packet delay, but frame rate reducing followed. 2) Using multiple network cards, and the cameras are connected separately to different network cards.
4	On the unactivated Windows7 64bit system, the installation of GalaxySDK has been successfully, but open the demo program failed.	1) Activate Windows7 64bit system, uninstall the package. Then, reinstall the package after restarting the system, and reopen the demo program.
5	Fail to open device, prompting the XML file parsing error.	1) Contact with the technical support to obtain upgrade program, and then upgrade your cameras.
6	Cannot receive any image after modifying the packet delay to a larger value.	1) Confirm the data block timeout settings in the configuration page, and adjust the timeout settings until the image data is received.

No.	General Question	Answer
7	The device fails to start acquisition, and the "Attach Buffer fails" error occurs.	1) Method 1: Modify the parameter of the stream layer **MaxNumQueueBuffer** (the maximum buffer number of acquisition queue). 2) Method 2: modify the size of the transmitted data block **StreamTransferSize** (the size of the data block divided by the acquisition queue Buffer). By default, Buffer needs a data block with a full image size, but when the system is used for a period of time, the continuity of memory is greatly affected by the current system environment, and the operation of some software may destroy the continuity of system memory, leading to the failure of image acquisition. If the size of the data block is reduced, for example, 120M memory is needed, and the size of the data block is set to 5M, then as long as the system has 24consecutive memory sizes meeting 5M, the image can be successfully acquired. It is not recommended to set the size of the data block to 1M or 2M This small data block operation may affect the stability of the system 3) Method 3: increase the physical memory size and replacing the 32bit system with a 64bit system, it is recommended to use windows7 or above, it is a good solution to this problem.
8	The camera cannot be enumerated, and the LED light is in Yellow-Green flashing state.	1) Network card does not support 1000/10000 Mbit/s, please replace the network card that supports this link speed. 2) Intel X550 series network card only supports Win10 64-bit OS, if you use Intel X550 series network card, please confirm the system.
9	The camera is not working at 10G, but working at 1G or 2.5G	1) Please confirm that the network card supporting 10G is used and the network card is inserted in the appropriate position. PCIE x4 gen3 is generally recommended. 2) Please confirm to use the latest network card driver. 3) Please confirm that the link speed settings of the network card are Auto Negotiation or 10G. 4) Please confirm to use CAT-6a or above, and the RJ interface cannot be loose.

© 2026 China Daheng Group, Inc. Beijing Image Vision Technology Branch

10	When using lossless compression function, there is a risk of losing frames and incomplete frames for 10 Gigabit network cameras.	1) Improve the CPU performance. 2) Reduce acquisition frame rate of the camera. Reference value: On the 12th-generation Intel Core i7 CPU, when the bandwidth after decompression exceeds 30G, there is a risk of losing frame. In this runtime environment: ● The bandwidth after decompression of 10 Gigabit network single-camera ranges from 10G to 25G, remaining within safe limits (with a maximum frame rate increase of 2.5 times). ● For 10 Gigabit network dual-cameras, must limit the bandwidth after decompression for each camera within 15G (with a maximum frame rate increase of 2.5 times). ● For 10 Gigabit network triple-cameras, must limit the bandwidth after decompression for each camera within 10G (Lossless compression cannot be relied upon to increase frame rates). ● For 10 Gigabit network quad-cameras, it is not recommended to use lossless compression function (unless the frame rate of the camera is reduced).

11. Revision History

No.	Version	Changes	Date
1	V1.0.0	1. Initial release	2023-02-20
2	V1.0.1	1. Modify 2.5.Camera Mechanical Installation Precautions 2. Add models of: MARS-2621-42GTM/C-S-VF8 MARS-2622-42GTM/C-S-VF8 MARS-2621-42GTM-NIR-S-VF8 MARS-2622-42GTM-NIR-S-VF8 and function description in 8 section 3. Update 5.1.Camera Dimensions and 5.3.Tripod Adapter Dimensions 4. Add lenses of HN-P-6M Series (1/1.8"), HN-P-20M Series Prime Lens (1.1"), HN-P Line Scan Series 5. Update 7.3.2.3 section of electrical level standard	2023-04-26
3	V1.0.2	1. Add models of: MARS-5000-24GTM/C, MARS-6500-18GTM/C, MARS-6501-18GTM/C 2. Modify section 2.5. Camera Mechanical Installation Precautions and section 5.3. Tripod Adapter Dimensions 3. Add Figure 5-3 and Figure 5-4 4. Add section 8.3.3 PGA Gain and section 8.8 Sequencer	2023-05-23
4	V1.0.3	1. Update 8.2.12 section, update the descriptions of exposure delay 2. Add 8.4.1, 8.4.2 and 8.4.9 sections 3. Update 8.6.1 section, calculation formula for row period and acquisition time 4. Update 8.8 section, sequencer supported FFC descriptions	2023-06-06
5	V1.0.4	1. Modify MARS-GT-S series camera name, remove “V8” from the model name, because it is only related to the camera’s exterior structure, not its functionality: MARS-2621-42GTM/C-S V8 MARS-2622-42GTM/C-S V8 MARS-2621-42GTM-NIR-S V8 MARS-2622-42GTM-NIR-S V8 2. Modify 5.2 Optical Interface descriptions 3. Modify Figure 6-2	2023-06-30
6	V1.0.5	1. Update 1.3 section 2. Update 2.4 section 3. Update the parameter tables in 4 section 4. Add MARS-561-207GTM/C, MARS-900-120GTM/C, MARS-1840-63GTM/C, MARS-5000-24GTM/C-NF, MARS-6500-18GTM/C-NF, MARS-6501-18GTM/C-NF models and relative parameters 5. Update mechanical dimensions in chapter 5 6. Update Figure 6-1 and Figure 6-2 7. Update 8.4.9 section 8. Add 8.9.Fan Control	2023-08-09

© 2026 China Daheng Group, Inc. Beijing Image Vision Technology Branch

No.	Version	Changes	Date
7	V1.0.6	1. Add MARS-1261-90GTM/C model and related information 2. Update the UI interface and usage description related to the software	2023-09-13
8	V1.0.7	1. Update section 2.5, section 5.1 and section 5.2	2023-09-19
9	V1.0.8	1. Add MARS-1610-52GTM/C, MARS-2020-42GTM/C, MARS-2440-35GTM/C model related information	2023-10-19
10	V1.0.9	1. Modify MARS-1610-52GTM/C, MARS-2020-42GTM/C, MARS-2440-35GTM/C related information 2. Add 3.6 Image Transmission Optimization Configuration	2023-12-04
11	V1.0.10	1. Update section 1.3 and section 3.6	2024-01-24
12	V1.0.11	1. Add MARS-5000-24GTM/C-TF, MARS-6500-18GTM/C-TF, MARS-6501-18GTM/C-TF model related instructions 2. Modify section description 3. Delete 6.2. Lens Selection Reference	2024-03-28
13	V1.0.12	1. Update Chapter 4, parameter of models MARS-1610-52GTM/C, MARS-2020-42GTM/C, MARS-2440-35GTM/C, MARS-5000-24GTM/C (-NF/TF), MARS-6500-18GTM/C (-NF/TF), MARS-6501-18GTM/C (-NF/TF) 2. Update 8.4.9 FFC related description	2024-08-16
14	V1.0.13	1. Add MARS-321-176GTM-TN-SWIR, MARS-533-134GTM-TN-SWIR model related information	2024-10-14
15	V1.0.14	1. Add MARS-170-662GTM/C, MARS-280-409GTM/C model related information	2024-11-19
16	V1.0.15	1. Update Chapter 4, parameter of models MARS-1610-52GTM/C, MARS-2020-42GTM/C, MARS-2440-35GTM/C 2. Add MARS-1610-52GTM/C-NF, MARS-2020-42GTM/C-NF, MARS-2440-35GTM/C-NF, MARS-2621-42GTM/C-NF, MARS-2622-42GTM/C-NF, MARS-2621-42GTM-NF-NIR, MARS-2622-42GTM-NF-NIR related information	2025-02-26
17	V1.0.16	1. Add MARS-2440-35GTM-NF-V model related information 2. Add section 8.10 PIV Mode 3. Add MARS-6100-18GTM/C-TF model related information	2025-03-31
18	V1.0.17	1. Update parameter of 4.2.16 MARS-6100-18GTM/C-TF 2. Update section 2.5 Camera Mechanical Installation Precautions	2025-04-29
19	V1.0.18	1. Update section 8.4.9 Flat Field Correction 2. Update Chapter 4, parameter of models MARS-2020-42GTM/C(-NF), MARS-6100-18GTM/C-TF	2025-06-03

© 2026 China Daheng Group, Inc. Beijing Image Vision Technology Branch

No.	Version	Changes	Date
20	V1.0.19	1. Update section 8.2.12 Exposure Delay, modify MARS-321-176GTM-TN-SWIR, MARS-533-134GTM-TN-SWIR, MARS-1261-90GTM/C, MARS-561-207GTM/C, MARS-900-120GTM/C, MARS-1840-63GTM/C, MARS-2621/2622-42GTM/C(-NF), MARS-2621/2622-42GTM(-NF)-NIR, MARS-2621/2622-42GTM/C-S, MARS-2621/2622-42GTM-NIR-S, MARS-5000-24GTM/C(-NF/TF), MARS-6500/6501-18GTM/C(-NF/TF) related information, add MARS-6100-18GTM/C-TF related information 2. Update section 8.4.9.5 Important Notes, add pixel level FFC notes 3. Update section 8.6.1 Maximum Allowable Frame Rate, modify MARS-6500/6501-18GTM/C(-NF/TF) related information	2025-07-29
21	V1.0.20	1. Update Figure 5-3, Figure 5-4, Figure 5-7, Figure 5-8	2025-09-03
22	V1.0.21	1. Add MARS-15100-6GTM/C-TF, MARS-561-207GTM/C-NF, MARS-1261-90GTM/C-NF, MARS-900-120GTM/C-NF and MARS-1840-63GTM/C-NF related information 2. Update Chapter 4, parameter of models MARS-561-207GTM/C(-NF), MARS-900-120GTM/C(-NF), MARS-1261-90GTM/C(-NF), MARS-1840-63GTM/C(-NF), MARS-6100-18GTM/C-TF 3. Update section 8.3.18 User Data Area, add 512K user data area related information	2025-10-15
23	V1.0.22	1. Update section 2.6 Certification and Declaration, modify FCC related information 2. Update Figure 4-16 MARS-15100-6GTM/C-TF sensor spectral response 3. Add section 8.5 Image Compression 4. Update chapter 10 FAQ	2025-12-05
24	V1.0.23	1. Add MARS-533-170GTM-TN-SWIR related model information 2. Add section 8.5.1.3 Important Notes	2026-04-09

12. Contact Us

12.1. Contact Sales

If you need to order products or inquire product information, please contact our sales:

Tel: +86 10 8282 8878-8081

Email: isupport@daheng-imaging.com

12.2. Contact Support

If you have any questions in using DAHENG IMAGING products, please contact the experts on our support team:

Tel: +86 10 8282 8878

Email: isupport@daheng-imaging.com